REP 1987-024

The Condor 91:922–932
© The Cooper Ornithological Society 1989

SENSITIVITY OF BROWN-HEADED COWBIRDS TO VOLATILES[1]

LARRY CLARK
Monell Chemical Senses Center, 3500 Market Street, Philadelphia, PA 19104

J. RUSSELL MASON
USDA/APHIS/S&T, Denver Wildlife Research Center, Section of Bird Control, Bldg. 16, Denver Federal Center, Denver, CO 80225 and Monell Chemical Senses Center, 3500 Market Street, Philadelphia, PA 19104

Abstract. We studied the ability of Brown-headed Cowbirds (*Molothrus ater*) to discriminate between two odors, ethyl butyrate and s-limonene, using a cardiac conditioning paradigm. Cowbirds not only learned to discriminate ethyl butyrate and s-limonene but they could also discriminate among concentrations of ethyl butyrate. Cowbirds could reliably discriminate the two odorants when vapor saturation was at least 0.6%. This suggests a discrimination sensitivity of at least 1.9×10^{13} molecules/ml or 0.76 ppm for ethyl butyrate. Despite the fact that passerines are presumed to have poor olfactory ability, these values are within the same sensitivity range as found in nonpasserines that have more elaborately developed olfactory anatomies.

Key words: Olfaction; odor discrimination; concentration responding; Molothrus ater.

INTRODUCTION

Notwithstanding early claims to the contrary (Audubon 1834, Strong 1911, Walter 1943), it is now apparent that some birds, most notably procellariiforms, some cathartid vultures, kiwis, and pigeons can use their sense of smell for orientation and foraging (Stager 1964; Wenzel 1968; Grubb 1972, 1974; Hutchinson [sic for Hutchison] et al. 1984; Papi 1986; Houston 1987). In spite of these well-documented cases a general perception persists among ornithologists that birds, as a whole, have a poorly developed sense of smell (e.g., Welty 1971). Perceptions have been slow to change because experimental data on threshold sensitivity and discrimination which are needed to support general statements on avian olfactory abilities are largely absent. As a consequence, avian olfactory abilities are often inferred using available anatomical data (sensu Bang 1964, 1971; Bang and Cobb 1968; Bang and Wenzel 1986).

Edinger (1908) proposed that the relative size of the olfactory bulb serves as a good index of the importance of olfaction to an animal in the wild. Consistent with this interpretation is the fact that species shown to attend to olfactory cues in the field (e.g., procellariiforms, vultures, and kiwis) have some of the largest relative olfactory bulb sizes among birds (Bang and Cobb 1968). However, even species with moderately or poorly developed olfactory anatomies such as domestic fowl (*Gallus gallus*), Rock Doves (*Columba livia*), Northern Bobwhites (*Colinus virginianus*), Black-billed Magpies (*Pica pica*), House Sparrows (*Passer domesticus*), and European Starlings (*Sturnus vulgaris*) have been shown to possess good olfactory acuity (Tucker 1965; Henton 1969; Wenzel and Sieck 1972; Stattelman et al. 1975; Clark and Smeraski, unpubl.), with threshold sensitivity levels comparable to rats and rabbits (Davis 1973).

Bang and Wenzel (1986) postulated that species with relatively less olfactory tissue may rely on a less critical use of the tissue, as for example, in humans, where odors provide mainly affective, rather than critical cognitive, information. Evidence from species with relative olfactory bulb sizes below the median found in birds suggests that this interpretation is not generally the case. Olfaction has been implicated as one of the redundant navigation systems in pigeons (Papi 1986; however, see Waldvogel 1989). Ducks may use odor cues as pheromones to facilitate courtship (Balthazart and Schoeffeniels 1979). Even hummingbirds and starlings can be trained to recognize and discriminate among complex odors (Goldsmith and Goldsmith 1982, Clark and Mason 1987, Papi and Ioale 1987). Among passerines, which are examples of species with the least developed olfactory anatomies, there is some

[1] Received 3 April 1989. Final acceptance 12 June 1989.

evidence to indicate that odor cues can be used to locate cached food (Jarvi and Wicklund 1984, Buitron and Nuechterlein 1985, Harrimann and Berger 1986). However, other studies on passerines have failed to detect their use of odors (Ben Moshe and Yom-Tov 1978, James and Verbeek 1985), indicating that good laboratory studies on olfactory ability are yet needed.

The present study was conducted as one in a series of investigations designed: (1) to provide data concerning the olfactory acuity of passerines, and (2) to provide information concerning the relationship (if any) between olfactory morphology and olfactory acuity. We used a cardiac conditioning paradigm to assess the ability of Brown-headed Cowbirds (*Molothrus ater*) to acquire an olfactory discrimination. Such data are essential in generating a data base for the comparative study of olfactory function in birds. Once patterns of olfactory abilities are known it may be possible to more accurately assess the importance of the chemosenses to a species' biology.

MATERIALS AND METHODS

Brown-headed Cowbirds were evaluated for odor responsiveness using cardiac conditioning techniques (Walker et al. 1986). Initially, birds were trained to associate electric shock with a strong odor stimulus. Cowbirds that met training criteria were subsequently trained to respond to a nonodor cue, i.e., light, as a test to determine whether sensory modality mediating perception of the conditioned stimulus affected responses within the cardiac conditioning paradigm. These cowbirds were then tested for their ability to discriminate between two odors as a function of concentration.

SUBJECTS

Adult Brown-headed Cowbirds were decoy-trapped at Sandusky, Ohio, August 1987, and transported to the Monell Center in Philadelphia. In the laboratory, the birds were individually housed in cages in a room with a constant ambient temperature of 23°C, and a constant 14L: 10D cycle. Water, food (Purina Flight Bird Conditioner), and medicated shell grit were always available. Diet was supplemented once a week with sliced apples and mealworms.

SUBJECT PREPARATION

Prior to behavioral testing, each cowbird was fitted with three stainless steel electrodes placed intramuscularly into a Type II ECG configuration (Sturkie 1965). This configuration provided an excellent low noise signal amenable for automated signal processing. After placement, the leads were secured to the bird with tape and the bird was wrapped in a piece of chamois cloth to restrict mobility. Once restrained, the bird was placed in an acrylic restraining tube with its nares protruding from a hole near the top of the tube (Fig. 1). Our experience with testing passerines indicates that while many birds experience tonic immobility while supine, this posture does not affect conditioning. The restraining chamber was placed within an air clearance tube, while the bird's bill was positioned into the odor delivery port. Air flow from the odor delivery port was directed down over the external nares, and care was taken to avoid direct exposure of the eyes. This precaution minimized the possibility that extra-nasal chemoreception (e.g., as mediated by trigeminal free nerve endings in the corneas) might confound responses. A vacuum tube was placed beneath the odor delivery port, and a slight negative pressure within the air clearance tube generated by a down-system exhaust fan ensured a draw of air over the bird's nares and rapid clearance of odorant from the conditioning chamber. The entire restraining and air delivery set-up was enclosed within a darkened, sound-attenuating chamber. Temperature within the chamber was maintained at 23°C during the course of experimental trials.

SIGNAL PROCESSING

The ECG signal was amplified through a Grass P511 preamplifier. The frequency of heart beats was counted by processing the 'R' component of the amplified ECG signal to a TTL pulse via a window discriminator/Schmidt trigger circuit. The analog ECG signal, TTL pulse, and reference voltage were monitored on an oscilloscope and recorded onto the floppy disk of a Commodore SX-64 computer.

ODOR DELIVERY

Odors were delivered to the bird via a dilution olfactometer similar to that described in Dravnieks (1975, Fig. 2). Briefly, a stream of air produced by a Gast 1-HAB pump, was regulated to a final pressure of 6 psi, and passed through a 60-cm × 5-cm cylinder containing activated charcoal, silica gel, and glass wool. Particulate matter was removed by a Gelman micropore

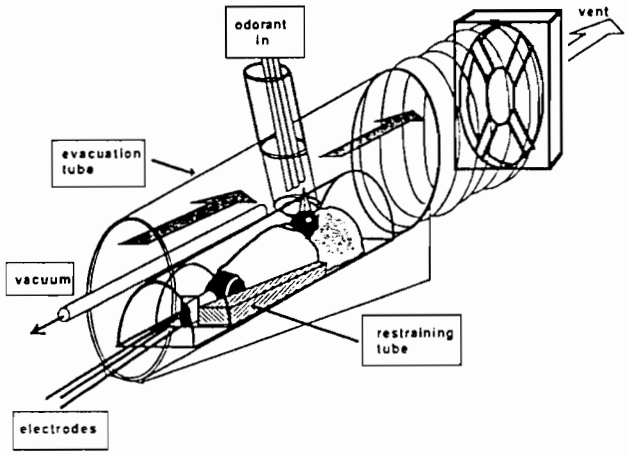

FIGURE 1. The restraint chamber, odor delivery port, and air evacuation schematic for cardiac conditioning procedures.

filter (maximum = 5 μ) before the filtered airstream was passed to a glass manifold. At the manifold the airstream was split into substreams whose flow rates were controlled by high resolution rotameters. Some substreams were odorized by passing them through glass odor-saturating vessels containing HPLC-grade chemical. Other substreams were used to dilute the odor-saturated substreams. The odor-saturating vessels were maintained in a constant temperature bath at 23°C. After odor dilutions were prepared, they were presented to the bird in the conditioning chamber through 3.2-mm O.D. teflon tubing. The volume and rate of these presentations were regulated at 2,000 ml/min by drawing an aliquot of odorized air from the substream and venting the remainder to the hood. Vented air and flow to the bird were regulated and monitored using needle valve rotameters. Presentation of odor or filtered air to the bird was regulated via a computer-activated line-driver/solenoid circuit. The design of the olfactometer allowed for delivery of stimulus intensities from saturated air to dilutions as great as 10^{-8} vapor saturation. Room temperature and barometric pressure were monitored, and this information was used to calculate the final concentration of stimulus at the odor delivery port (Dravnieks 1975).

ODORANTS

We used HPLC-grade (Fluka) ethyl butyrate (EB), "pineapple oil," [$C_6H_{12}O_2$, MW 116.16, bp 120–121°C, $d^{20}{}_4$ 0.879] and s-limonene (SLIM), "carvene," [$C_{10}H_{16}$, MW 136.24, bp 176–177°C, $d^{20}{}_4$ 0.842], as olfactory stimuli. Carvene has a faint lemon smell. Both odorants had served as reliable stimuli in past work with a variety of passerines, including European Starlings, Red-winged Blackbirds (*Agelaius phoeniceus*), and Common Grackles (*Quiscalus quiscula*) (Clark, unpubl. data).

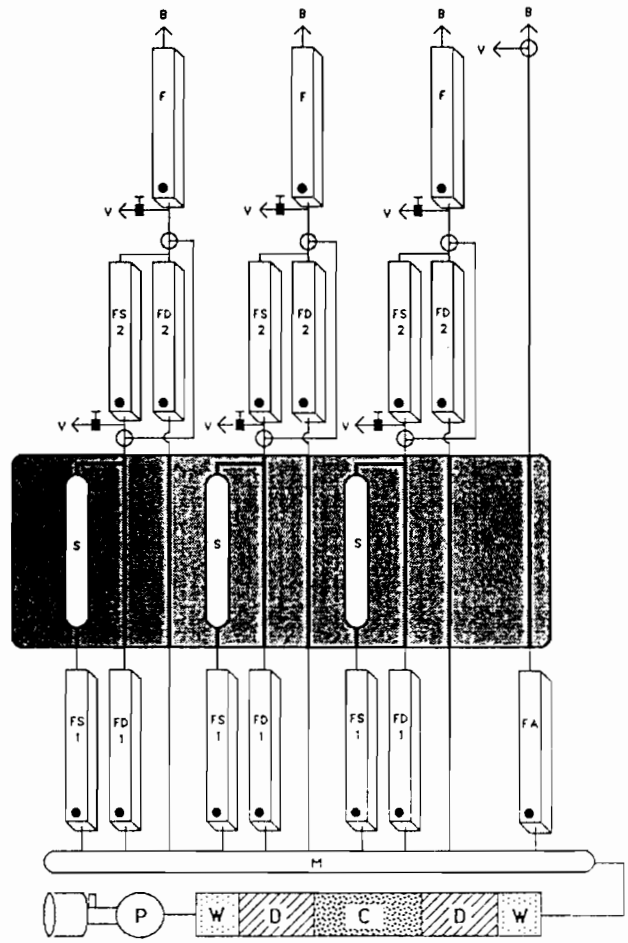

FIGURE 2. Diagram for the dilution olfactometer. (B) flow to bird, (C) activated charcoal, (D) drierite, (FA) flow meter regulating fresh dry air, (FD) flow meter regulating dilution air, (FS) flow meter regulating odorized air, (M) glass manifold, (P) pump, (S) odor saturator, (V) vent to hood, (W) glass wool. Intersected circles depict solenoids. Solid squares with "T" depict needle valves.

CARDIAC CONDITIONING

Cardiac conditioning is a reliable physiological measure of a bird's ability to detect odors (Michelsen 1959, Walker et al. 1986). The following terminology applies to all experiments. A single stimulus presentation was called a trial (T). Trials involving odor presentation were always paired and consisted of the random but contiguous presentation of each of the two odor stimuli with a randomly assigned interstimulus interval which ranged from 60–300 sec. A block consisted of 10 trials, i.e., five presentations of EB and five presentations of SLIM.

On the first day of testing an individual was trained to discriminate between EB and SLIM. Testing involved placing a restrained bird into the conditioning chamber and allowing it to adapt to its surroundings. The air pump served as a white noise source to mask sound and vibration cues associated with solenoid switching. Adaptation was operationally defined as the exhibition of a stable, resting heart rate (HR). Stable HR, within the range of 480–500 beats per minute (bpm) was normally achieved within 30 min. Next, cowbirds were trained for three blocks to discriminate 5% vapor saturation (% VS) EB from 5% VS SLIM. S^+ trials involved a 10-sec presentation of EB followed immediately by a 5-sec, 10-V, electric shock (negative reinforcer) delivered through the electrodes attached to the bird's legs. S_o trials involved an unreinforced 10-sec presentation of SLIM. A conditioned response was defined as acceleration in heart rate. However, the level of cardiac acceleration in response to a stimulus varied among birds. This variance weighted responses of 'excitable' birds more heavily. Consequently, a dichotomous, state variable was used that placed equal weight on the responding of all birds, viz. yes, HR increased after stimulus presentation, or, no, it did not increase.

A cowbird was considered to have demonstrated a positive cardiac response to the S^+ stimulus (EB), relative to the nonreinforced control odor (SLIM), S_o, if

$$dR_i^+ > \bar{X}_{S_o} + SE_{S_o} \qquad (1)$$

where dR_i^+ was the change in HR for the ith trial of the S^+ presentation, $\bar{X}_{S_o}$ was the mean responsiveness to the nonreinforced control odor, and SE_{S_o} was one standard error of the mean for the nonreinforced control odor. This comparison controlled for spontaneous responses possibly due to nonreinforced odor, pressure, and solenoid sound effects.

The change in HR for each S^+ presentation was defined as

$$dR_i^+ = R_i^+{}_{post} - R_i^+{}_{pre} \qquad (2)$$

where, $R_i^+{}_{post}$ was the HR for the ith 10-sec sampling period during the delivery of the S^+ stimulus and $R_i^+{}_{pre}$ was the HR for the ith 10-sec sampling period immediately preceding S^+ presentation. The mean responsiveness to the nonreinforced control odor was defined as

$$\bar{X}S_o = \left(\sum_{1}^{15} dS_{o,i}/15\right) \qquad (3)$$

where dS_o was the change in HR of the ith trial of the S_o presentation. The mean was based upon the S_o training trials (T = 15) presented over three blocks. Birds were considered to have responded to the nonreinforced control if

$$dS_{o,i} > \left(\sum_{i=1}^{15} db_i/15\right) + SE_{db} \qquad (4)$$

where db_i was the change in baseline HR during the ith trial ($db = b_1 - b_2$), where b_1 was defined as HR during a 10-sec sampling period beginning 30 sec prior to stimulus delivery and b_2 was the HR during a 10-sec sampling period beginning 20 sec prior to stimulus delivery. This comparison controlled for spontaneous responses possibly due to pressure changes, vibration, or noise associated with solenoid switching. These criteria were used as an objective means of evaluating whether cardiac acceleration occurred because of S^+ or S_o presentation, and formed the basis for evaluating threshold sensitivity curves.

CONCENTRATION-RESPONSE TESTS

Six birds discriminated EB and SLIM, and therefore were given additional tests 7 days after the training day. These tests involved presentations of varied odor concentrations. Initially, individuals were retrained for two blocks at 10% VS to assure high levels of odor discrimination between EB and SLIM. This training was followed by nonreinforced paired-odor presentations in five blocks of ascending concentration at 0% VS (the baseline control), 0.05%, 0.1%, 0.25%, and 0.5% VS. After the blocks of odor presentation in which neither odor was reinforced, individuals were retrained at 10% VS for one block to assure that discrimination between EB and SLIM did not extinguish. This retraining was followed by another series of nonreinforced odor presentations in blocks of ascending concentration at 1%, 2%, 4%, and 30% VS. Individuals were given 7 days rest and again tested. As before, subjects were retrained for two blocks to assure discrimination between EB and SLIM. Subsequently, birds were tested for responding to nonreinforced odor presentations in blocks of ascending concentration at 0%, 0.5%, 1%, and 2% VS. These presentations were followed by a block of rein-

forced training at 10% VS. Following reinforcement, birds were given nonreinforced odor presentations in blocks of ascending concentration at 4%, 8%, 16%, and 30% VS.

RESPONSIVENESS TO A NONODOR CUE

The six birds that discriminated EB and SLIM were tested for their ability to form a cardiac acceleration in response to a nonodor stimulus. When compared to the olfactory response data we were able to assess the learning abilities of birds in our conditioning paradigm to odor and nonodor cues. Training proceeded as in the case of odor training except that the S^+ in this case was light and changes in HR were compared to the HR of the interstimulus interval (db). Interstimulus intervals were randomly assigned and ranged from 60–300 sec.

ANALYSES

We used an analysis of variance (ANOVA) with repeated measures to determine whether baseline heart rate changed as a function of experimental conditions (i.e., whether baseline heart rates varied as a function of the experiment's duration or the odor presented, i.e., EB vs. SLIM). The difference scores of the prestimulus heart rates associated with odor treatment were used as values for the dependent variable. During the course of training, trials represented the within subjects repeated measure factor. Unless otherwise stated, variance for all factors in all analyses were tested and found to be homogeneous.

The individual response profiles to odor stimuli during acquisition of conditioned responses were used to categorize birds ($n = 9$) into similar response profile groups. A cosine measure was used to estimate a similarity matrix of the response profiles, while a complete linkage routine was used to cluster birds into groups (SPSSx 1986).

Differences between groups for response profiles were tested using a repeated measures factorial ANOVA. Cumulative number of responses was the dependent variable for between subjects analysis and trial, odor, and trial × odor were treated as within subjects effects. Error terms were those specified by the repeated measures module of a MANOVA routine of SPSSx (1986).

The probability of a subject responding to a given vapor saturation level of odorant was calculated using a probit analysis. Probit is a procedure used to optimize the dose-response relationship of an independent variable on a dichotomous dependent variable (SPSSx). Because probit requires response counts from the total number of observations, responses to categories of vapor saturation were used. However, because EB has a lower vapor pressure than SLIM, cowbirds were always presented with a higher concentration of EB during any given vapor saturation presentation. Absolute concentrations of odorants delivered to the subject also varied across days as a function of differences in barometric pressure and temperature at the odor exit port. These minor fluctuations in concentration within each category of vapor saturation were one source of error in estimating actual odorant sensitivity.

RESULTS

INFLUENCE OF EXPERIMENTAL PARADIGM ON HEART RATE

While cowbirds were isolated from the olfactometer, solenoid switching did produce a small amount of noise, vibration, and change in pressure within the odor lines. Naive cowbirds initially showed an orienting response (cardiac acceleration) to these perturbations even when presented with deodorized (filtered) air (Fig. 3). In the absence of reinforcement, however, cowbirds rapidly habituated to these perturbations. All data described here were obtained from birds previously habituated to solenoid activity.

A second concern during training was whether restraint and reinforcement might increase the level of stress (operationally defined as generalized increases in HR) as the experiment progressed. Some evidence of stress was obtained. While the minimum resting HR prior to conditioning was 534 bpm, the minimum rate during interstimulus intervals following the onset of conditioning was 648.2 ± 30.3 SE bpm ($n = 9$). However, there were no differences among interstimulus HRs per se ($r = 0.347$, $P < 0.07$; Fig. 4), and at no point did interstimulus rates reach the cowbirds' maximum recorded HR of 840 bpm. We conclude that birds experienced some stress throughout experiments, but that a systematic response bias did not exist.

DISCRIMINATION OF ODORS

Individual discrimination profiles between EB and SLIM, each presented at 5% vapor saturation, are depicted in Figure 5. Clearly, there was considerable variation in both responsiveness to

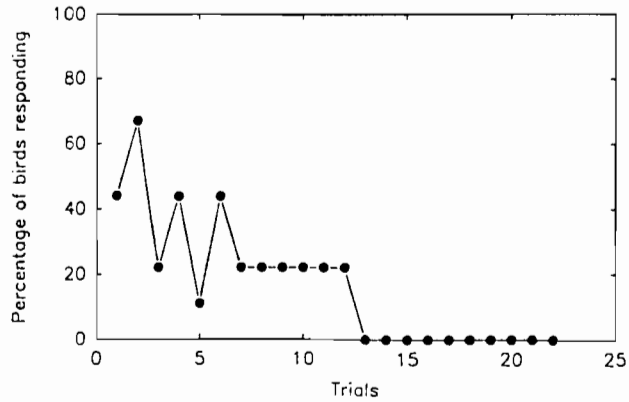

FIGURE 3. Habituation to noise, vibration, and pressure pulses generated by solenoids. Percentage of birds (n = 9) that showed a cardiac acceleration as a function of the number of times solenoids in the olfactometer switched from one to another odor-free channel. Intertrial intervals of 60–300 sec were randomly assigned.

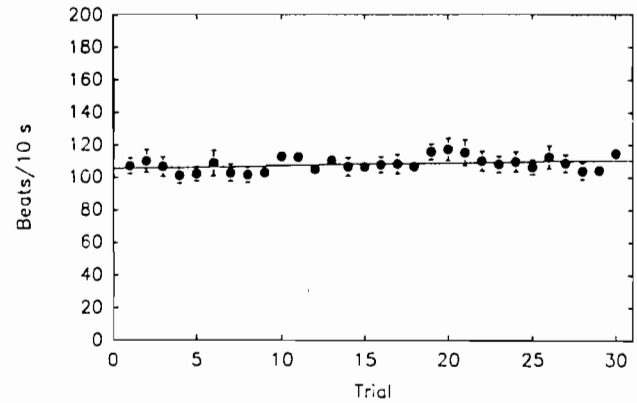

FIGURE 4. The mean (n = 9) ± SE HR as a function of the time course of cardiac conditioning training. HR counts were taken during the 10-sec prestimulus delivery interval. The intertrial intervals of 60–300 sec were randomly assigned. Values are depicted as a function of trial sequence with no distinction made for which trial (S^+ or S_o) the prestimulus sampling period represented. The maximum observed heart rate during cardiac conditioning was 140 beats/10 sec. The minimum heart rate during previous nonexperimental trials was 89 beats/10 sec.

odor and ability to discriminate between odors. Cluster analysis of the individual response profiles for the learning acquisition curves indicated that the cowbirds were comprised of two populations: Group 1 (birds 2, 4, 5, 10, 13, 14) and Group 2 (birds 1, 9, 11). The response profiles for these two groups differed for each of the odors presented (F = 12.13, df = 14,98, P < 0.001, Fig. 6). Group 1 consisted of responder/discriminator birds which learned to respond to EB (S^+) presentation but did not show cardiac acceleration to the control, SLIM (S_o), presentations. Group 2 consisted of nondiscriminator birds, which exhibited completely overlapping response profiles for EB (S^+) and SLIM (S_o) presentations. Interestingly, while Group 2 birds were unable to discriminate between odor stimuli, they did show a tendency to respond to both odorants at levels higher than the control response profile for Group 1 birds. This pattern could suggest that (a) Group 2 birds could detect both odors but not discriminate between them, (b) Group 1 birds could detect EB but not SLIM, or (c) Group 2 birds were highly sensitive to the odorants, and thus responses may have been confounded by trigeminal (i.e., irritant) factors. Further experimental work is necessary to decide this issue. We speculate that the first explanation is the strongest, because Group 2 responses were highly variable, suggesting difficulties in detection and/or discrimination.

Also shown in Figure 6 is the responsiveness of Group 1 birds to a light stimulus (S^+) during a separate, subsequent, training session. The similarity of the light and EB profiles for Group 1 birds indicated training to attend to odors was just as effective as training to attend to a visual cue.

RESPONDING TO VARIED ODORANT CONCENTRATIONS

As we stated in the methods section, Group 1 birds were used in all subsequent experiments for evaluation of odor threshold. A plot of the relative increase in HR as a function of the molecular concentration of odorant is shown in Figure 7. While there was no change in HR upon exposure to the control odor, SLIM (S_o) (Fig. 7B), there was a tendency for a relative increase in HR as concentrations of EB (S^+) increased (Fig. 7A). While the mean maximum increase of 10% at the highest levels of EB presentation may seem small, this value represents an increase in HR from 648 to 712 bpm. This pattern suggests that the birds not only learned to discriminate between EB and SLIM but also that learning involved discrimination among EB concentrations. We recognize that because only the training concentration of EB was reinforced, responding to other EB concentrations may have been less vigorous. As such, it is possible that birds may have been able to show discrimination between lower EB and SLIM concentrations than was indicated by our data. The reason that we chose not to reinforce all odorant concentrations was

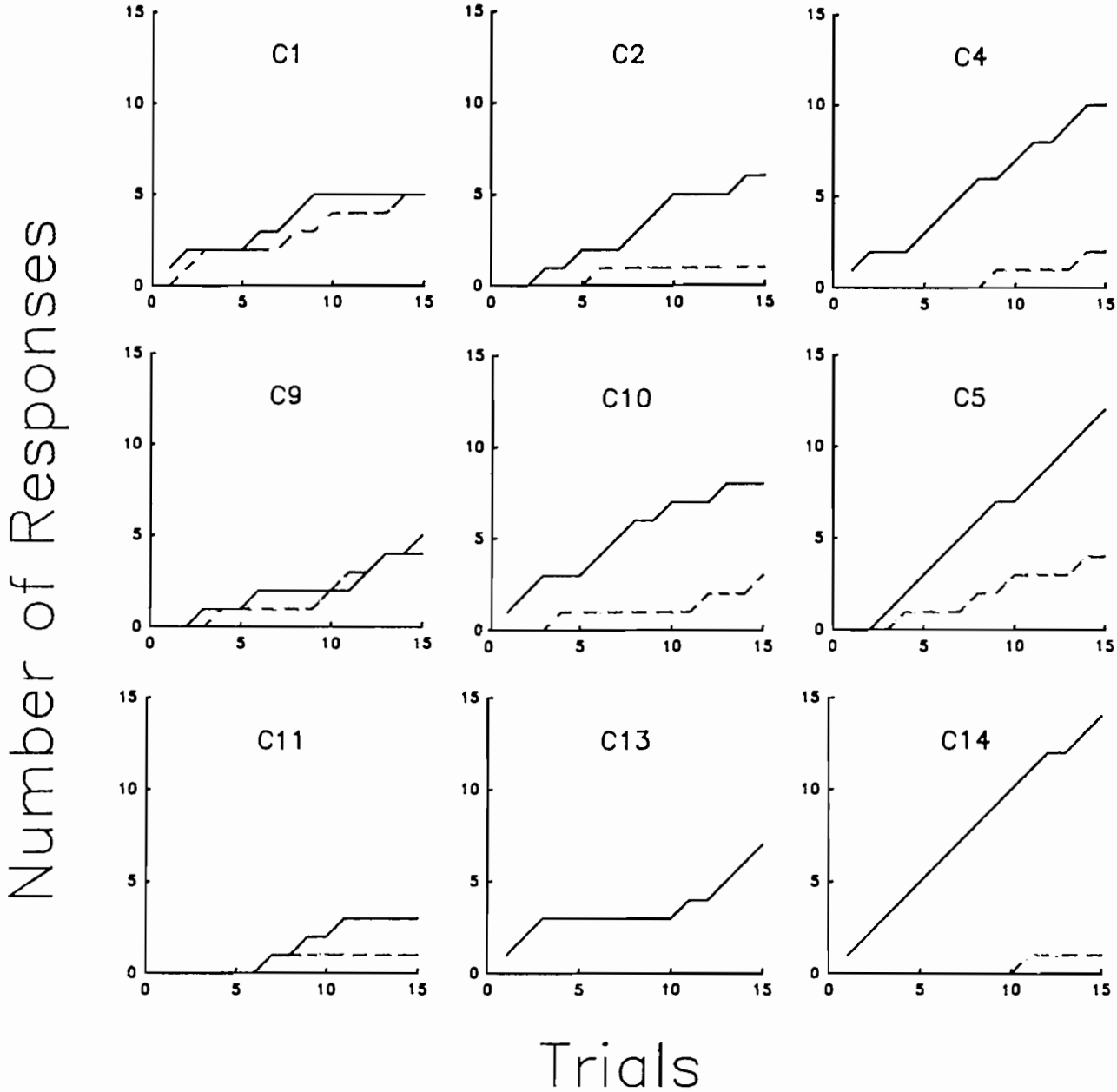

FIGURE 5. The individual responses to odor stimuli. The solid line represents responding to the S^+, ethyl butyrate. The dashed line represents responding to the S_o, s-limonene.

to minimize the number of shocks administered and so to decrease the level of stress. Regardless, the fact that birds exhibited stronger responses to EB concentrations close to the concentration used in training implies that the birds were capable of discriminating odorant quantity as well as quality.

Probit analysis indicated that cowbirds discriminated between EB and SLIM when vapor saturation was at 0.6%, as indicated by the point where the 95% confidence intervals intersected (Fig. 8). Conservatively, this suggests reliable discrimination between odorants when EB is at 1.9 $\times 10^{13}$ molecules/ml (0.76 ppm) at 760 mm Hg and 23°C.

DISCUSSION

Olfactory acuity has two major components (Mozell 1972). The first is threshold sensitivity to odor concentration, i.e., detection ability, while the second is the ability to discriminate odors. Passerines are reputed to possess the poorest ability to detect odors among avian species. While the present experiment did not strictly evaluate threshold, it did demonstrate that at least some Brown-headed Cowbirds reliably can discrimi-

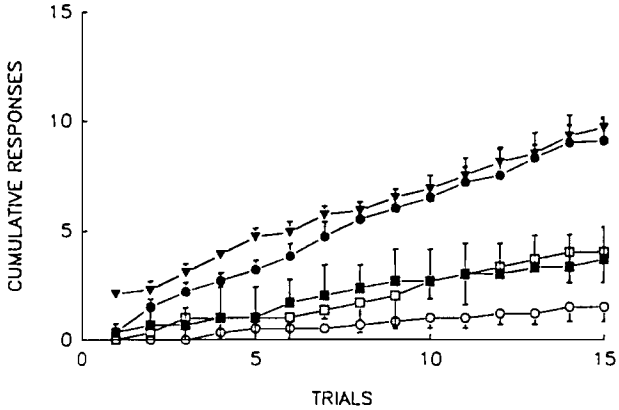

FIGURE 6. The profiles of the odor by group by trial within-subjects interaction. Group 1 birds (n = 6) are depicted by circles, group 2 birds (n = 3) by squares. The S^+ stimulus is shown as solid symbols, the S_o as open symbols. The vertical bars represent ± one standard error of the mean (SE). The response profile for a light (S^+) stimulus (inverted triangles) was recorded during experiments subsequent to odor tests.

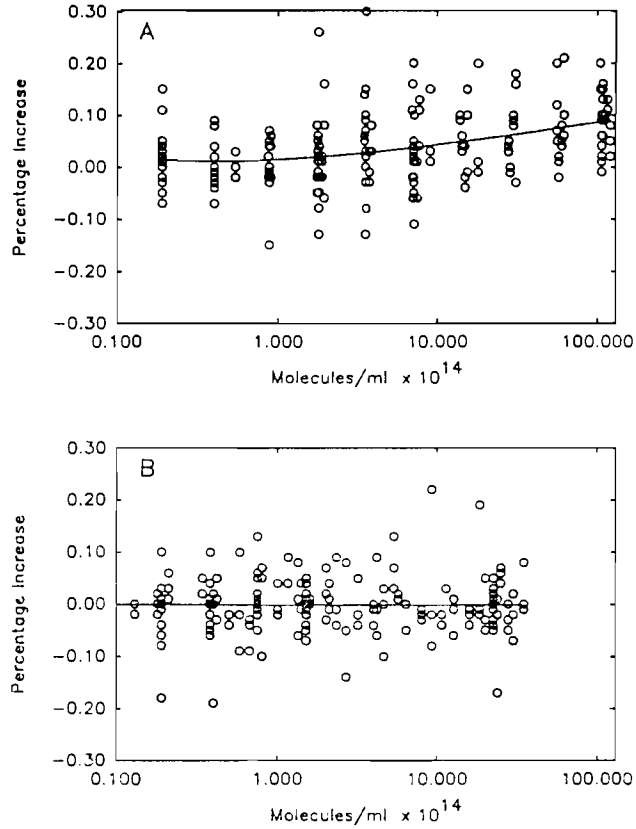

FIGURE 7. The relative increase in heart rate as a function of concentration of odor presentation: (A) the S^+ stimulus, ethyl butyrate, (B) the S_o stimulus, s-limonene. Lines depict average relative increase in heart rate.

nate two odors at concentrations that are comparable to threshold detection values reported for nonpasserine species (Table 1). Accordingly, our data are consistent with electrophysiological measurements indicating that receptor odorant thresholds for a variety of species are similar across a range of odor concentrations (Tucker 1965).

The notion that passerines are odor insensitive stems from two observations. First, passerine olfactory bulbs are relatively small in relation to cerebral hemisphere size (Bang 1971). Second, the nasal cavity is relatively simple (Bang 1971). Large olfactory bulbs and elaborate nasal conchae (that increase receptor surface area) are typical of macrosmatic birds, including kiwis, vultures, and procellariiforms. Bulb size and receptor surface area were thought to correlate with olfactory performance (Edinger 1908, Adrian 1951). However, we argue that morphology does not necessarily predict sensory capacity and that anatomy alone cannot provide a full explanation of behavior. Of the avian species tested to date (Table 1), olfactory acuity is about the same regardless of olfactory bulb size. Undoubtedly as additional species are tested, relationships between olfactory acuity, taxonomic status, and morphology will emerge. At present, we believe that such speculations are premature, and propose that two kinds of evidence be collected. First, there is a need for a comparative data base among species in terms of their responsiveness to reagent grade stimuli. These data may provide insights into relationships between behavioral and physiological sensitivity and physicochemical parameters of stimuli (e.g., Silver et al. 1985, Mason et al. 1989). In addition, acuity data will

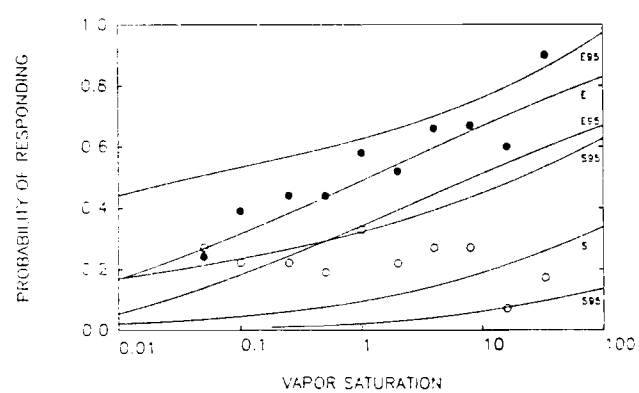

FIGURE 8. Probability of responding to odor presentation as a function of concentration. Solid circles are values for EB. The line labeled E depicts the expected probability of responding as determined by the probit analysis. The lines labeled E95 depict the upper and lower 95% confidence limits. Open circles are values for SLIM. The line labeled S depicts the expected probability of responding for SLIM with upper and lower 95% confidence limits (S95).

TABLE 1. Avian threshold sensitivity.[a]

Species	Ratio[b]	Odorant	Threshold (ppm)[c] Min	Max	Source[d]
Rock Dove *Columba livia*	18.0	n-amyl acetate	0.31	29.80	4, 5, 8, 9
		Benzaldehyde	0.47	0.75	9
		Butanethiol	13,820		6
		Butanol	0.17	1.30	9
		n-butyl acetate	0.11	2.59	4, 9
		Butyric acid	2.59		4
		Ethanethiol	10,080		6
		Heptane	0.29	0.38	7
		Hexane	1.53	2.98	7
		Pentane	16.45	20.76	7
Domestic fowl *Gallus gallus*	15.0	Heptane	0.31	0.57	7
		Hexane	0.64	1.00	7
		Pentane	1.58	2.22	7
Northern Bobwhite *Colinus virginianus*		Heptane	2.14	3.49	7
		Hexane	3.15	4.02	7
		Pentane	7.18	10.92	7
Black-billed Magpie *Pica pica*	7.0	Butanethiol	13,416		6
		Ethanethiol	8,400		6
European Starling *Sturnus vulgaris*	9.7	Cyclohexanone	2.50		3
Tree Swallow *Tachycineta bicolor*	15.0	Cyclohexanone	67.46		1
Brown-headed Cowbird *Molothrus ater*	7.0	Ethyl butyrate	0.76		2

[a] Data reported are for behavioral threshold evaluation only.
[b] The ratio of the longest axis of the olfactory bulb to that of the ipsilateral cerebral hemisphere.
[c] Different studies report concentrations in different units. Data were converted to parts per million using all information available in the original report. At times not all information was available; in those cases conversions were made assuming 760 mm Hg and 23°C for experimental conditions.
[d] (1) Clark, unpubl., (2) this study, (3) Clark and Smeraski, unpubl., (4) Henton 1969, (5) Henton et al. 1966, (6) Snyder and Peterson 1979, (7) Stattelman et al. 1975, (8) Walker 1983, (9) Walker et al. 1986.

allow comparisons between birds and mammals. Avian species clearly show very different responses to a wide variety of chemical stimuli relative to responses exhibited by mammals (e.g., Mason et al. 1989). An avian chemosensory data base comparable to the existing mammalian data base could permit fundamental insights into how morphological differences among classes affect olfaction. Second, sensitivity to natural stimuli will enable us to better understand what cues are available to birds in making ecologically important decisions. Deciphering what is an ecologically relevant cue is not an easy task. At the present time it is widely recognized that volatile cues may be important to carrion feeders and seabirds in locating food (Bang and Wenzel 1986). Similarly, a chemical evaluation or screening of potential prey for toxicity may prove an efficient means to optimize foraging strategies. Yet even more subtle functions of the avian olfactory system may exist. For example, starlings may use volatiles for the selection of green plant material as a means to chemically protect nests from ectoparasites and pathogens (Clark and Mason 1985, 1987, 1988). The significance of olfaction to birds may be unlike our own subjective sensation of smells because of the differences in mammalian and avian nervous systems (Tucker 1965, Neuhaus 1963). Thus, physiological and behavioral functionality should be our first clue that ecological functionality may also exist.

ACKNOWLEDGMENTS

We thank D. Clark for his assistance in the laboratory, and are grateful to R. A. Dolbeer, P. P. Woronecki, and T. W. Seamans for supplying the cowbirds. We thank C. A. Smeraski and J. F. Glahn for reading an earlier draft of the manuscript. This study was funded in part by NIH grant 2 RO1 NS19424-13 and USDA Cooperative Agreement #12-16-74-0154. Birds were held under permit #PRT-719909. Experimental procedures outlined were reviewed and approved by Monell's Institutional Animal Care and Use Committee which complies with guidelines set forth by NIH and USDA/APHIS.

LITERATURE CITED

ADRIAN, E. D. 1951. Olfactory discrimination. L'Annee Psychol. 50:107–113.

AUDUBON, J. J. 1834. Ornithological biography. Vol. II. Adam and Charles Black, Edinburgh.

BALTHAZART, J., AND E. SCHOEFFENIELS. 1979. Pheromones are involved in the control of sexual behaviour in birds. Naturwissenschaften 66:55–56.

BANG, B. G. 1964. The nasal organs of the Black and Turkey vultures; a comparative study of the cathartid species *Coragyps atratus* and *Cathartes aura septentrionalis atratus*. J. Morphol. 155:153–184.

BANG, B. G. 1971. Functional anatomy of the olfactory system in 23 orders of birds. Acta Anat. 79, Suppl.:1–76.

BANG, B. G., AND S. COBB. 1968. The size of the olfactory bulb in 108 species of birds. Auk 85:55–61.

BANG, B. G., AND B. M. WENZEL. 1986. Nasal cavity and olfactory system, p. 195–225. *In* A. S. King and J. McLelland [eds.], Form and function in birds. Vol. 3. Academic Press, London.

BEN MOSHE, Y., AND Y. YOM-TOV. 1978. On the existence of a sense of smell in some birds. Biol. Behav. 3:35–38.

BUITRON, D., AND G. L. NUECHTERLEIN. 1985. Experiments on olfactory detection of food caches by Black-billed Magpies. Condor 87:92–95.

CLARK, L., AND J. R. MASON. 1985. Use of nest material as insecticidal and anti-pathogenic agents by the European Starling. Oecologia (Berl.) 67:169–176.

CLARK, L., AND J. R. MASON. 1987. Olfactory discrimination of plant volatiles by the European Starling. Anim. Behav. 35:227–235.

CLARK, L., AND J. R. MASON. 1988. Effect of biologically active plants used as nest material and the derived benefit to starling nestlings. Oecologia (Berl.) 77:174–180.

DAVIS, R. G. 1973. Olfactory psychophysical parameters in man, rat, dog, and pigeon. J. Comp. Physiol. Psychol. 85:221–232.

DRAVNIEKS, A. 1975. Instrumental aspects of olfactometry, p. 1–61. *In* D. G. Moulton, A. Turk, and J. W. Johnston, Jr. [eds.], Methods in olfactory research. Academic Press, New York.

EDINGER, L. 1908. The relations of comparative anatomy to comparative psychology. J. Comp. Neurol. Psychol. 18:437–457.

GOLDSMITH, K. M., AND T. H. GOLDSMITH. 1982. Sense of smell in the Black-chinned Hummingbird. Condor 84:237–238.

GRUBB, T. C., JR. 1972. Smell and foraging in shearwaters and petrels. Nature (Lond.) 237:404–405.

GRUBB, T. C., JR. 1974. Olfactory navigation to the nesting burrow in Leach's Petrel *Oceanodroma leucorhoa*. Anim. Behav. 22:192–202.

HARRIMAN, A. E., AND R. H. BERGER. 1986. Olfactory acuity in the Common Raven (*Corvus corax*). Physiol. Behav. 36:257–262.

HENTON, W. W. 1969. Conditional suppression to odorous stimuli in pigeons. J. Exp. Anal. Behav. 12:175–185.

HENTON, W. W., J. C. SMITH, AND D. TUCKER. 1966. Odor discrimination in pigeons. Science 153:1138–1139.

HOUSTON, D. C. 1987. Scavenging efficiency of Turkey Vultures in tropical forests. Condor 88:318–323.

HUTCHINSON [SIC FOR HUTCHISON], L. V., B. M. WENZEL, K. E. STAGER, AND B. L. TEDFORD. 1984. Further evidence for olfactory foraging by Sooty Shearwaters and Northern Fulmars, p. 72–77. *In* D. N. Nettleship, G. A. Sanger, and P. F. Springer [eds.], Proceedings of the Pacific Seabird Group symposium on marine birds: feeding ecology and commercial fisheries relationships. Can. Wildl. Serv., Spec. Publ., Ottawa.

JAMES, P. C., AND N.A.M. VERBEEK. 1985. The food storage behaviour of the Northwestern Crow. Behaviour 85:276–291.

JARVI, T., AND C. WICKLUND. 1984. A note on the use of olfactory cues by the Great Tit *Parus major* in food choice. Fauna Norv. Ser. C. 7:139.

MASON, J. R., M. A. ADAMS, AND L. CLARK. 1989. Anthranilate repellency to starlings: chemical correlates and sensory perception. J. Wildl. Manage. 53:55–64.

MICHELSEN, W. J. 1959. Procedure for studying olfactory discrimination in the pigeon. Science 130: 630–631.

MOZELL, M. M. 1972. The chemical senses: olfaction, p. 193–222. *In* J. W. King and L. A. Riggs [eds.], Experimental psychology I: sensation and perception. Holt, Rinehart, Winston, New York.

NEUHAUS, W. 1963. On the olfactory sense of birds, p. 111–123. *In* Y. Zotterman [ed.], Olfaction and taste. Pergamon, Oxford.

PAPI, F. 1986. Olfaction and homing in pigeons: ten years of experiments, p. 149–159. *In* F. Papi and H. G. Wallraff [eds.], Avian navigation. Springer, Berlin.

PAPI, F., AND P. IOALE. 1987. Olfactory conditional discrimination in the hummingbird *Colibri serrirostris vieillot* (Aves Apodiformes). Monit. Zool. Ital. 21:197–198.

SILVER, W. L., J. R. MASON, D. A. MARSHALL, AND J. A. MARUNIAK. 1985. Rat trigeminal, olfactory and taste responses after capsaicin desensitization. Brain Res. 333:45–54.

SNYDER, G. K., AND T. T. PETERSON. 1979. Olfactory sensitivity in the Black-billed Magpie and in the Pigeon. Comp. Biochem. Physiol. A. Comp. Physiol. 62:921–925.

SPSSx: User's guide. 1986. 2nd ed. McGraw-Hill, New York.

STAGER, K. E. 1964. The role of olfaction in food location by the Turkey Vulture (*Cathartes aura*). Contrib. Sci. (Los Ang.) 81:1–63.

STATTELMAN, A. J., R. B. TALBOT, AND D. B. COULTER. 1975. Olfactory thresholds of pigeons (*Columba livia*), quail (*Colinus virginianus*) and chickens (*Gallus gallus*). Comp. Biochem. Physiol. A. Comp. Physiol. 50:807–809.

STRONG, R. M. 1911. On the olfactory organs and sense of smell in birds. J. Morphol. 22:619–662.

STURKIE, P. D. 1965. Avian physiology. Cornell Univ. Press, Ithaca.

TUCKER, D. 1965. Electrophysiological evidence for olfactory function in birds. Nature (Lond.) 207: 34–36.

WALDVOGEL, J. A. 1989. Olfactory orientation by birds, p. 269–321. *In* D. M. Power [ed.], Current ornithology. Vol. 6. Plenum Press, New York.

WALKER, J. C. 1983. An operant procedure for testing olfactory capacities in restrained pigeons. Physiol. Behav. 30:165–168.

WALKER, J. C., D. B. WALKER, C. R. TAMBIAH, AND K. S. GILMORE. 1986. Olfactory and nonolfactory odor detection in pigeons: elucidation by a cardiac acceleration paradigm. Physiol. Behav. 38: 575–580.

WALTER, W. G. 1943. Some experiments on the sense of smell in birds. Arch. Neerl. Physiol. 27:1–72.

WELTY, J. C. 1971. The life of birds. Alfred A. Knopf, New York.

WENZEL, B. M. 1968. Olfactory prowess of the kiwi. Nature (Lond.) 220:1133–1134.

WENZEL, B. M., AND M. H. SIECK. 1972. Olfactory perception and bulbar electrical activity in several avian species. Physiol. Behav. 9:287–294.