FERAL HOGS- STATUS AND DISTRIBUTION IN MISSOURI

A Thesis presented to the Faculty of the Graduate School
University of Missouri-Columbia

In Partial Fulfillment
Of the Requirements for the Degree

Master of Science

By
R. EDWIN HARTIN

Dr. Mark Ryan, Thesis Advisor

MAY 2006

ACKNOWLEDGEMENTS

I want to take this opportunity to acknowledge the support and mentorship of my committee members during my academic research. Dr. Mark Ryan served as my advisor, mentor, and basic support during this academic endeavor and to him; I express sincere thanks and gratitude. Dr. Russ Reidinger also provided the periodic support and encouragement that was needed to complete the project while I was working a full-time job. He is a true friend and mentor and has been a true inspiration to me in furthering my education. Dr. Charles Nilon and Dr. William Kurtz have also provided instruction and support as well as serving on my graduate committee. I appreciate both of them for their professionalism and encouragement during this process.

I want to thank my supervisors, Charles Brown and Robert Hudson in USDA-APHIS-Wildlife Services for their support and understanding through this endeavor and for allowing me the time to increase my education and professionalism. My co-workers have been very helpful and supportive in this educational process.

TABLE OF CONTENTS

ACKNOWLEDGEMENTS…….…..ii

ABSTRACT……..iii

CHAPTER 1……..…….…1

1998 FERAL HOG DISTRIBUTION……..15

2000 FERAL HOG DISTRIBUTION……..16

2002 FERAL HOG DISTRIBUTION……..17

2004 FERAL HOG DISTRIBUTION……..18

MISSOURI FERAL HOG TASK FORCE……...19

FERAL HOG CONTROL METHODS…….....28

CHAPTER 2…….44

LITERATURE CITED…….....58

APPENDIX A-TRAP PLANS……..64

Chapter 1

Feral Hogs-Status and Distribution in Missouri

Introduction

Approximately 50,000 nonindigenous species have been introduced to the United States (Pimentel et al. 2000). Some benefit man, for example, species introduced as food crops and as domestic livestock which provide 98% of the U.S. food system, at a value of approximately $800 billion per year (USBC 1998). Other exotic species have been introduced for landscape restoration, biological pest control, sport, pets, and food processing, also with significant benefits. Some nonindigenous species, however, have caused major economic losses in agriculture, forestry, and other segments of the U.S. economy.

History of Feral Hogs in America

Christopher Columbus first introduced members of the family Suidae into North America in 1493 in the West Indies. Hernando De Soto and other explorers brought hogs with them to supply fresh meat on their journeys from the 1500s onward (Towne and Wentworth 1950). Some of these animals escaped and initiated feral hog populations. Hogs have been in Texas since the 1680s and were important livestock to the early settlers, who usually allowed their animals to roam free (Mapston 2004). Florida's wild hogs are believed to be a mixture of Eurasian wild boars, and domestic hogs (Gingerich 1994). When confronted by war and economic hard times, settlers often had to abandon their homesteads on short notice, leaving their animals to fend for themselves. Thus, many free-ranging, domesticated hogs became feral over time.

Feral hogs (*Sus scrofa)* have become a serious problem in Florida, with numbers having risen to more than 500,000 (Layne 1997). Texas reports numbers in excess of 1.5 million (Mapston 2004). Nationwide, there are an estimated 4 million feral pigs. Damage is reported to crops, forests, native vegetation, and native wildlife. Soil erosion and disease transmission to livestock also are problems associated with feral hogs.

Based on environmental and crop damages of approximately $200 per pig annually, the yearly damage caused by the 4 million feral pigs in the United States amounts to approximately $800 million (Pimentel et al. 2000). This estimate is conservative because pigs cause significant environmental damages and diseases that cannot be easily translated into dollar values. Engeman et al. (2004) reported that the total value of the damaged areas within a study site in Florida ranged from $1.2 million to $4 million. These values are substantially undersestimated if the potential economic spillover effects of feral swine management are extended to include endangered and threatened species, water quality impacts, suburban development areas, agricultural lands, domestic livestock, and the transmission of diseases to livestock and humans.

History of Feral Hogs in Missouri:

During the settlement of Missouri, livestock were legally allowed to roam freely and it was the responsibility of landowners, not livestock owners, to fence their properties to exclude hogs and other livestock. State law was changed in 1873, to allow individual counties to decide who was responsible for fences to control livestock. St. Charles County was one of the first to require confinement of hogs, but did not do so until 1884. Other counties gradually followed suit and “free range” ended for the whole state in 1969 (T. Hutton, unpublished report).

Since 1969, there have been feral hogs in a few Missouri Counties, primarily south of Interstate 44. These populations have been sporadically augmented by intentional releases or accidental escapes in those counties and other counties. Locations that have had hogs for the last ten years include Mark Twain National Forest in Barry, Stone, and occasionally in other counties. Hogs also were found on the Missouri Department of Conservation (MDC) White Ranch Conservation Area in Howell County prior to its acquisition in the early 1980s (T. Hutton, APHIS, pers. commun.).

Feral hogs are found in many states within the United States. Whereas some of these populations have been around for many years, others are recent establishments. Missouri's most recent introductions have not been established for long and control efforts have been ongoing since the early 1990's. Hunters take a large number of hogs, but stop short of eradication due to the difficulty of removing the last few specimens within each discreet subpopulation. There are confirmed illegal releases of feral swine by members of the public that want to establish huntable populations (B. Kohne, MDC, pers.commun.).

In the early 1990s, the situation began to change as some people began raising and promoting European wild boar (*Sus scrofa)* as a form of alternative agriculture and for hunting on controlled-shooting areas. Also in the early 1990s, domestic pork prices plummeted and hogs were released by owners rather than suffering losses trying to raise them. Hunters also developed a keen interest in hunting hogs from trips to the southern United States where feral hogs are plentiful.

Feral Hogs Definition and Identification

The term "feral hog" applies collectively to Eurasian wild boars (i.e., Russian boars), domesticated hogs that have become feral, and hybrids of the two (Nowak 1991). Feral hogs also have been called European wild hogs, wild boars, razorbacks, pineywoods rooters, woods hogs, and other more "colorful" names. These names all refer to the same species of swine. However, the hog-like collared peccary, or javelina (*Tayassu tajacu*), a native species of the southwestern U.S., belongs to a different genus, is much smaller, and is not feral (Whitaker 1988).

Missouri Revised Statutes, Chapter 270.400, defines feral hogs as …*any swine not conspicuously identified by ear tags or other forms of identification that was born in the wild or lived outside of captivity for a sufficient length of time to be considered wild by nature by hiding from humans or being nocturnal shall be considered feral hogs…Any person may take or kill a feral hog on public land or private land with the consent of the landowner; except that, during the firearms deer and turkey hunting season the regulation of the Missouri Wildlife Code shall apply.*

Eurasian Wild Boars

Eurasian wild boars have longer legs, larger heads, longer snouts, and a larger head-to-body ratio that other feral hogs. They have shorter, straighter tails than feral hogs or hybrids. The coat usually consists of light brown to black bristles with cream to tan tips. The back of the head and part of the rostrum are covered with brown to black bristles with white tips. The underside is light in color (cream to smoky gray) and the legs, ears, and tail are dark, comprised of dark brown or black bristles with no light-colored tips. Bristles of the pure Eurasian hog are longest and thickest of all types and

usually have multiple splits at the tips. Eurasian hogs are without the neck wattles or syndactylous (joined or webbed) digits, as have been found in the other types of wild swine (Mapston 2004).

Feral Hogs

Domestic hogs are now morphologically very different from their original parent forms (Whitaker 1988). "Feral hogs" are hogs that have escaped or been released into the wild. With each generation, the feral hog has diminished domestic characteristics as they express the genetic traits necessary to survive in the wild. Original breed and nutrition during development determine the size and color of feral hogs. Coat color and pattern are highly variable. Solid black is the predominate color, but some may be brown, red, white, spotted, belted (black or brownish red with a white and across the shoulders and forelimbs), or have rare blue or gray roan patterns. Bristles of feral hogs are shorter than those of Eurasian boars and hybrids. Bristles are less thick than those of Eurasians, but thicker than those of hybrids. Bristles are a solid color and split at the tips. The underfur and bristles are the same color. This form of feral hog, unlike the European or hybrid, may show neck wattles and syndactylous (webbed) digits (Mapston 2004).

Hybrids

Hybrid hogs are crosses between Eurasian boars and feral hogs and have characteristics of both. Feral hogs and wild boar readily interbreed forming morphologically intermediate hybrids (Whitaker 1988). Coat color and pattern can resemble that of Eurasian boars, feral hogs, or any combination of the two. Bristles are shorter than in Eurasians, but longer than if feral hogs, and not as thick as either of the other two. The bristles have split tips. The under fur varies from black to a whitish or

smoky gray and may be a different color than the bristles. Hybrids may have neck wattles and syndactylous digits (Mapston 2004). The lower tusks are smaller; they turn out slightly rising outside the mouth and pointing back toward the eyes (Whitaker 1988).

Characteristics

Overall, feral swine are smaller, leaner, and more muscular than their domestic counterparts. Average boar and sow weights are about 130 pounds (59 kilograms) and 110 pounds (50 kilograms), respectively, although the largest adults may weigh more than 900 pounds (450 kilograms) and be more that 3 feet (1 meter) tall and 5 feet (1.8 meters) long (Nowak, 1991). Males have larger heads and tusks than females. Compared to domestic swine, feral hogs have more well-developed shoulders, longer and larger snouts and tusks, smaller and mostly pricked ears, longer and coarser hair, and straighter tails with a bushy tip (Mapston 2004).

Some feral hogs develop a mane or crest of hair on their necks and backs that can be raised when they are angered. This is the reason for the nickname “razorback.” Juveniles of all types of wild swine may have striped patterns that disappear as the hogs mature. Longitudinal striping is rarely seen in domestic hogs.

Feral hogs have rounded body contours, short legs, and cloven-hoofs with four toes, two of which have been modified into large dewclaws. Males develop thick areas of tough skin, cartilage and scar tissue on their shoulders. This area, called the shield, develops continually as the hog ages and fights and may be up to 2 inches thick. Feral hogs have poor eyesight, but excellent senses of hearing and smell. Their specially developed snouts are flattened and strengthened by a plate of cartilage, which allows them to root in all types of soil.

Skulls of wild hogs are recognizable by the steeply elevated cranium, the absence of a bony ring around the eye socket, the presence of well-developed incisors in the upper jaw, and the presence of upper canines that project outward and sometimes upward. The dental formula is I3/3, C1/1, P4/4, M3/3 X 2= 44 (Lowery 1974). The permanent teeth are in place by the time a hog is 22 months old. Males of all types of wild swine have four continually growing tusks (canine teeth) that they use for defense and to establish dominance for breeding. Tusks (Figure 1) project from the sides of the mouth, can be extremely sharp, and may grow 5 inches before they are broken off or worn down from use. The upper tusks (sometimes called witters or grinders) function as whetstones to the lower tusks, keeping them sharp. If an upper tusk is damaged or deformed, the corresponding lower tusk can continue to grow in a complete circle and re-enter the lower jaw (Mapston 2004).

Figure 1. Feral hog skull showing the enlarged canine teeth (tusks).

Reproduction

Breeding occurs throughout the year when conditions are favorable, and seasonally when food supply and nutrient quality vary. In tropical areas, wild hogs breed year round. In temperate areas, breeding occurs in the spring (Nowak 1991). Males fight for control of female groups, and usually win control of 1-3 females, rarely up to 8 (Nowak 1991). Males return to their solitary lives after breeding (Nowak 1991, Gingerich 1994). Females have an estrous cycle of 21 days and are generally receptive for 2-3 days. The gestation period is 100 to 140 days (Ingles 1965, Nowak 1991). Near term females leave the group to give birth, but rejoin it shortly after.

Unlike other ungulates, the young are born in a nest in which they remain for some time after birth (Nowak 1991). Nests are generally shallow depressions lined with grass or Spanish moss (Golley 1962). Under favorable conditions, sows can produce two litters every 12 to 15 months, with an average of four to eight piglets per litter and sex ratio of 1:1. Litter size has been reported to increase with age and peaks when females are between 2-3 years of age (Baber and Coblentz 1986). Johnson et al. (1982) reported a mean litter size of 3.3 for wild hogs of the Great Smokey Mountains National Park. Baber and Coblentz (1986) reported litter size as 5 for wild hogs established on San Catalina Island, California.

The piglets are weaned in three to four months, and may leave the mother prior to the birth of the next litter (Nowak 1991). Sexual maturity is obtained as early as 5-8 months in females and 8-12 months in males (Johnson et al. 1982). Although cases of under yearling females conceiving in the wild have been reported (Conley et al. 1972),

females typically do not breed until they are at least 18 months of age (Nowak 1991). Males do not breed until they reach full size at about 5 years of age (Nowak 1991).

Drought and food shortages can delay breeding and reduce the number of piglets born, but feral hog populations recover quickly when conditions improve. Feral pigs have a reproductive rate that is closer to rabbits than to other large herbivores and potentially, populations can increase by 86% a year (Choquenot et al. 1996). Feral hogs are the most prolific large, wild mammal in North America (Wood and Barrett 1979). With adequate nutrition, a feral hog population can double in 4 months. A study in South Texas reported that fecundity in pigs was more than four times higher than native ungulates (Taylor et al. 1998).

Habitat

Feral hogs have adapted well to a wide range of ecosystems. Wild hogs occur in many habitats, but prefer wooded areas close to water (Gingerich 1994). They occur in flat coastal areas, in swamps and marshes, as well as on hills or mountain sides (Golley 1962). McCann et al. (2003) report the two most important habitats for feral hogs in Illinois were forests and agricultural areas. Crops can provide needed nutrients at certain times of the year. Because reproduction is strongly linked to nutrition, agricultural areas may be important to the reproductive success of feral hogs. Forests provide both cover and food for hogs. Hogs also prefer dense vegetation that conceals them and protects them from temperature extremes. Only poor habitat (very little vegetation or water) seem to limit their distribution. Hogs usually concentrate where food is plentiful.

Home range is largely influenced by the abundance of food. Feral hogs (particularly boars) may travel as much as 15 miles (24 kilometers) in search of adequate

food and/or water (Mapston 2004). Hogs in areas where food is scarce have larger home ranges than those where food is adequate. Therefore, fall and winter ranges are generally larger than spring and summer ranges. Home ranges vary from 0.4 miles (0.6 kilometers) to more than 19 miles (30.5 kilometers), but normally are 0.5 to 3 square miles (0.8 to 4.8 square kilometers) (Mapston 2004). Baber and Coblentz (1986) reported home ranges for wild pigs established on Santa Catalina Island, California to vary between 0.90 and 2.44 square kilometers, with males having larger home ranges than females. Home ranges vary between males and females, and with climate, population density, and food availability (Baber and Coblentz 1986).

Behavior

Feral hogs are mostly social animals and tend to travel in family groups. A basic group, called a sounder, consists of one or more sows and their young. Weaned pigs remain with their mother until another litter is due or until she has mated. Other groups may consist of young females, bachelor males, or other combinations. Adult boars older than 18 months, however, are almost always solitary animals that rejoin groups only to mate or to feed on a particular food. Farrowing sows will temporarily separate themselves from a group. Group sizes vary considerably by region and season. Groups normally consist of two to 20 individuals, but as many as 40 or 50 animals may come together during dry seasons or drought (Mapston 2004). Wild hogs usually roam in groups of several females and their young. Males are solitary except when associated with breeding groups (Gingerich 1994).

Unlike territorial animals, feral hogs do not travel throughout their entire range in short periods of time, but rather traverse the area somewhat randomly throughout the

season. Boars have larger daily, seasonal, and overall home ranges than sows. Sows with newborn young will stay in a very small area during the piglets' first couple of weeks of life.

Feral hogs are usually nocturnal. They may be active for a while during early morning or late afternoon, but only when temperatures are cooler and when seeking suitable shelter and wallowing areas. They seldom move around at mid-day unless disturbed. Major disturbances can cause feral hogs to permanently shift their home range several miles away. Infrequent or minor disturbances will cause hogs to move only a short distance, and they will return once the disturbances have passed (McIlroy and Saillard 1997). Their sense of sight is poor, but their senses of hearing and smell are extremely acute (Ingles 1965). Wild hogs are typically not aggressive and will retreat if approached. However, when cornered, wounded, or defending young, they may charge and are capable of inflicting serious wounds with their razor sharp tusks (Ingles 1965, Nowak 1991, Gingerich 1994).

Wild hogs do not have sweat glands and regulate their body temperature by lying in water or mud, and cannot survive in hot climates without a plentiful supply of water (Gingerich 1994). Their foraging behavior, and the areas in which they forage most intensely, varies seasonally in accordance with fluctuating temperatures (Belden and Pelton 1975, Van Vuren 1984).

Feral hogs are opportunistic omnivores. Young wild hogs are taken by a number of different predators, including hawks, owls, eagles, coyotes, foxes, bobcats (Laycock 1984, Gingerich 1994). Adults are rarely taken because of their large size; panthers kill and consume wild hogs in southern Florida (Gingerich 1994).

Problems Caused by Feral Hogs

Feral hog populations cause damage to field crops including corn, milo, rice, watermelon, peanuts, hay, turf, wheat, and other grains (Beach 1993). Hog caused damage to field crops result both from feeding and from feeding-related activities such as trampling and rooting. As would be expected, the heaviest damage often occurs toward the end of the growing season when crops are near maturity.

Feral hogs are efficient predators. Texas records indicate that even though feral hogs prey on all age classes of domestic animals, most prey tends to be immature animals (Beach 1993). Feral hogs use their acute sense of smell to locate birthing grounds, where they feed on afterbirths and fetal tissue (Beach 1993). Pigs also prey on healthy lambs, kids, and fawns often removing newborn animals before they are seen or accounted for by the producer. Because hogs so thoroughly consume the young prey, there is often little evidence left to suggest that a birthing and subsequent predation has occurred (Beach 1993).

Feral hog populations compete with resident deer and turkey populations for limited resources. Feral hogs are omnivorous and feed on many items that are staples for native fauna (Wood and Roark 1980, Scott and Pelton 1975, Baber and Coblentz 1987). Thus, feral hog feeding activities can have a negative effect on the availability of food resources for both livestock and wildlife (Everitt and Alaniz 1978 and 1980). One of the more important seasonal food item types for feral hogs is the mast crop, especially oak mast (Wood and Roark 1980). Oak mast is also an important food source for deer and turkey. When feral hogs actively compete for mast food (Yarrow 1987), resident deer and turkey may enter the winter with deficient fat reserves. Whereas deer and turkey

feed primarily by sight and are limited to what is visible, the hog uses their keen sense of smell to locate the fallen crop (Beach 1993). Thus, pigs can more thoroughly deplete an area of mast than do deer and turkey (Ray 1988).

The feral hog's rooting and wallowing activities damage pastures, spoil watering holes, and generally deteriorate riparian habitat (Beach 1993). Feral hogs are persistent in their rooting behavior. They methodically work an area until they have depleted the food item of interest. Given optimum conditions (i.e., pliable soils) hogs can do considerable damage (Barrett 1982). Because they attack at the root level, they kill plants and decrease survivability of some species. To the hog's credit, rooting tends to increase the aeration and humus content of the soil (Wood and Lynn 1977). Nonetheless, rooting upsets climax communities and can create an environment that favors less desirable invader species of plants (Jacobi 1980).

Riparian habitat can be devastated by rooting and wallowing behavior. This is particularly true when drought conditions concentrate large numbers of hogs into a limited riparian area (Beach 1993). Excessive rooting can damage the banks, deplete the flora, muddy the water, and result in a silt-laden benthic substrate (Scott and Pelton 1975). The viability of aquatic fauna populations can be depreciated by feral hog activities.

Because feral hogs tend to occupy the same areas as deer and livestock, disease and parasite spread is a concern. A probable point of contact is communal watering holes. Due to its limited ability to thermoregulate, the hog is attracted to watering areas to wallow (Belden and Pelton 1976). Infected hogs can spread parasites and diseases

through both direct contact and by contaminating drinking water. Contamination of a watering hole with urine is consistent with the hog's wallowing behavior (Beach 1993).

Feral Hog Distribution in Missouri

Locations of hog sightings were gathered by Missouri Department of Conservation from Conservation Agents as early as 1998. These maps have been updated several times since this first attempt to monitor hog sightings from around the state. These maps are compiled from the reported sightings that have been called into any of the state's agency offices and recorded. They do not attempt to show populations or frequency of sightings only locations of sightings.

The Missouri Department of Conservation surveyed its Conservation Agents in January 1998 (Figure 2) and reported feral hog populations in 12 counties and isolated sightings in one county. They were surveyed again in January 2000 (Figure 3) and reported populations in 12 counties and isolated sightings in seven counties. The public reported hogs in 4 of the counties. In April 2002, Conservation Agent surveys reported populations of hogs in eight counties and isolated sightings in an additional twelve counties in Missouri (Figure 4). In January 2004 (Figure 5), Conservation Agent surveys and reports from citizens indicated populations in 15 counties and isolated sightings in 11 additional counties. It appeared that hogs previously reported in Cole, Saline and the initial releases in Nodaway County had been eliminated with a combination of recapture, shooting by adjacent landowners, concentrated public hunting, and MDC staff efforts.

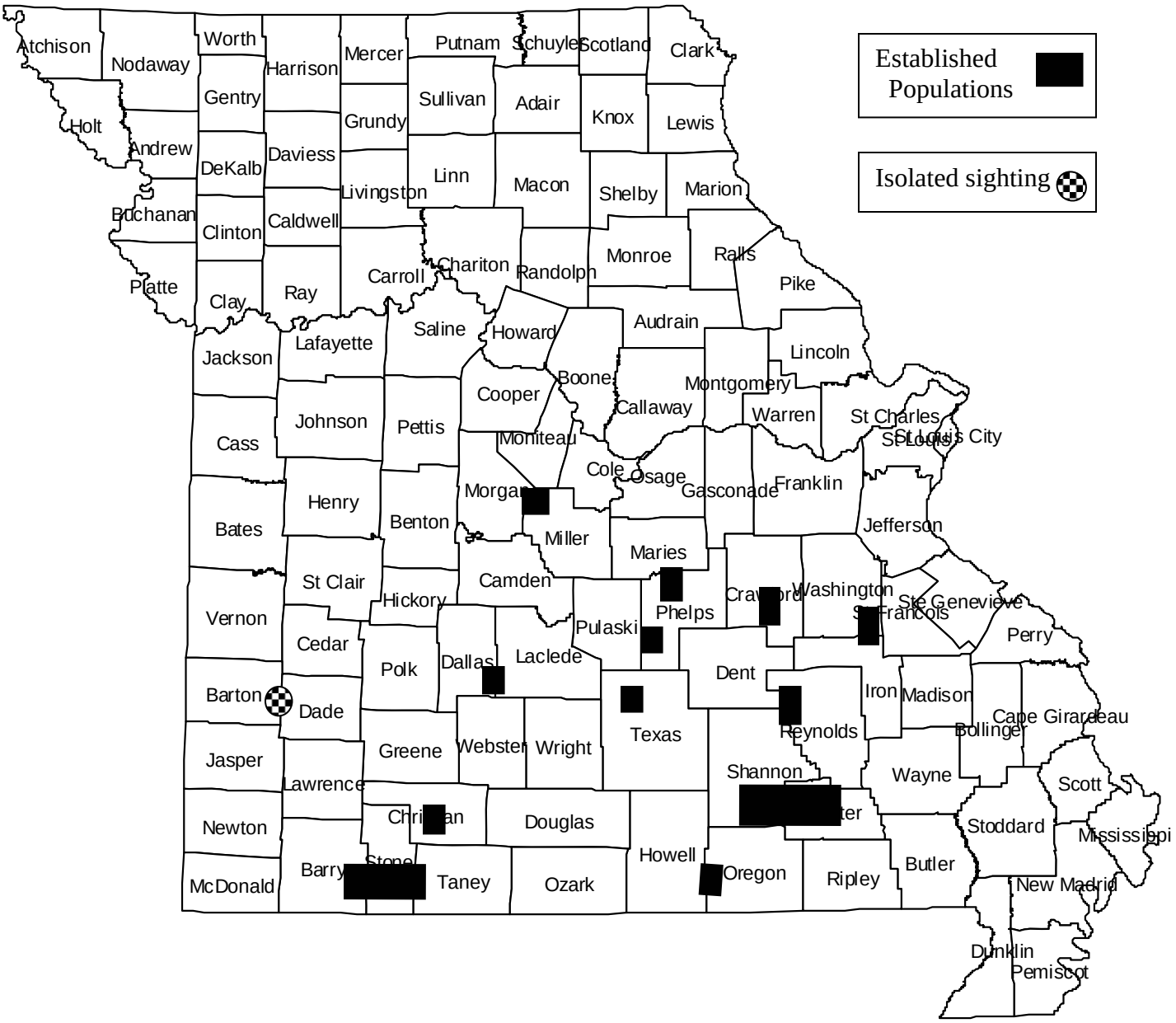

Figure 2. Feral hog distribution based on Conservation Agent reports in Missouri, Spring 1998.

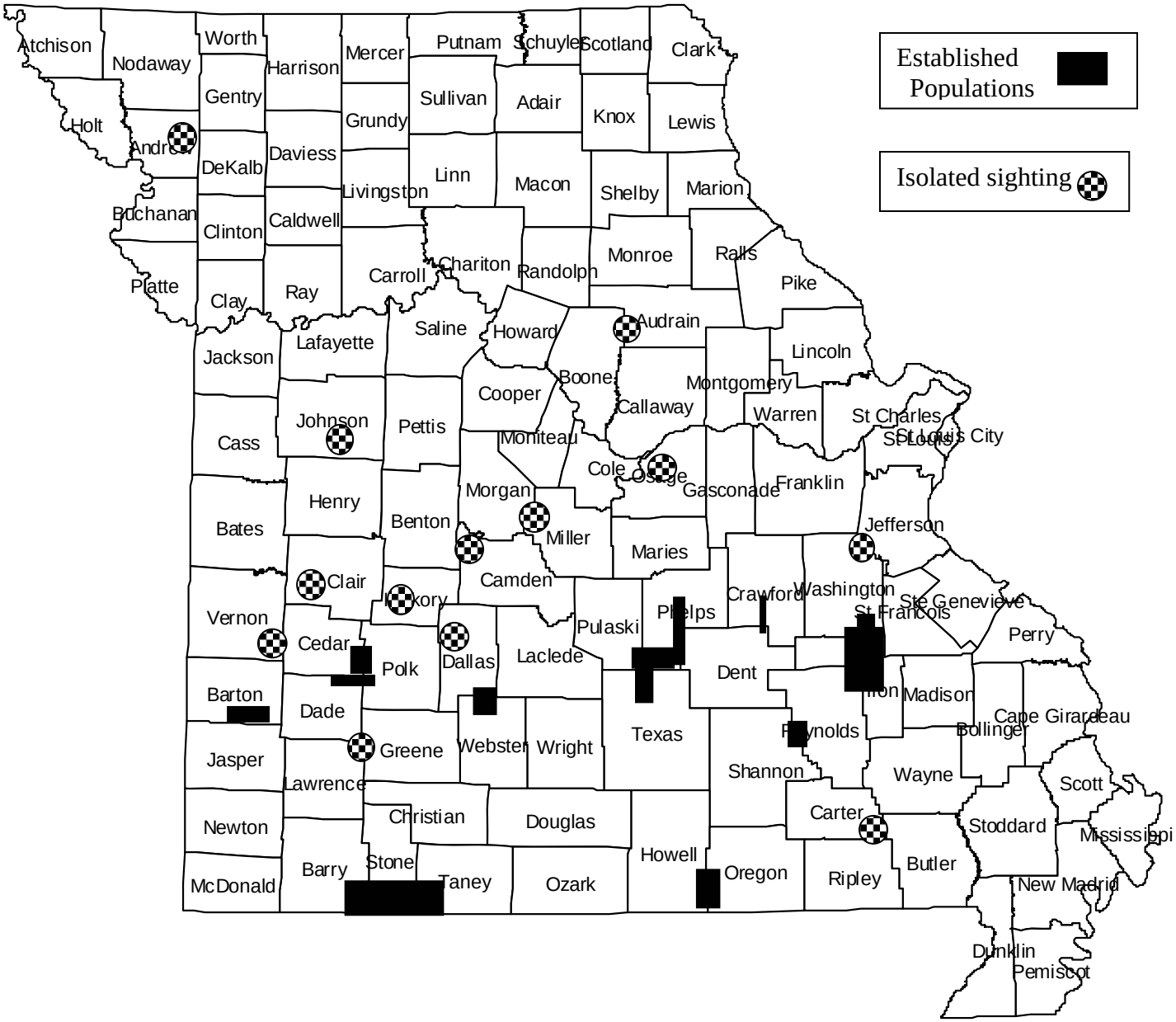

Figure 3. Feral hog distribution based on Conservation Agent reports in Missouri, October 2000.

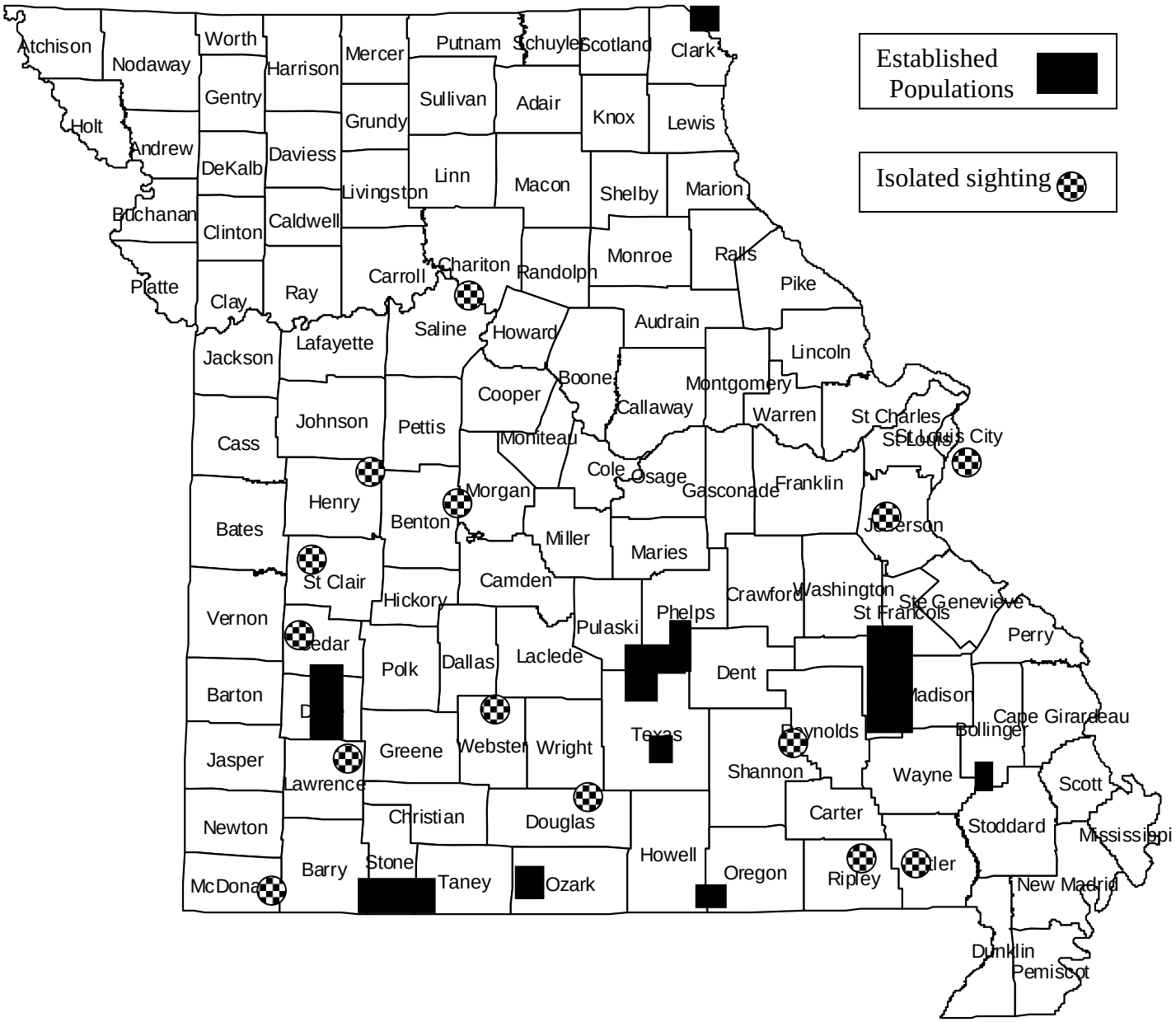

Figure 4. Feral hog distribution based on Conservation Agent reports in Missouri, April 2002.

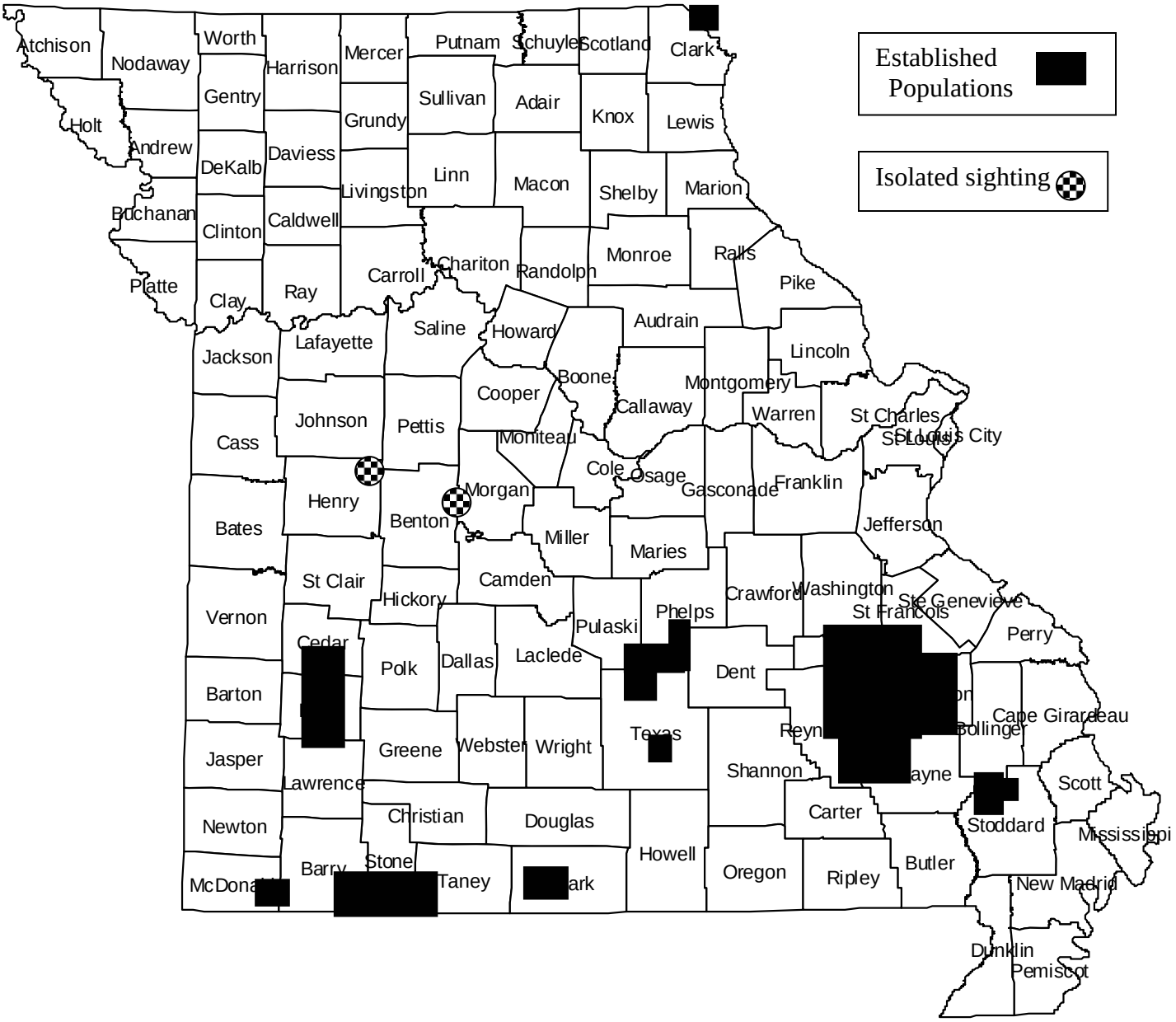

Figure 5. Feral hog distribution based on Conservation Agent reports in Missouri, August 2004.

Missouri Feral Hog Task Force

Feral hogs became an issue in Missouri in 1991 when a small population was detected living in the Irish Wilderness of the Mark Twain National Forest in Oregon County. Hunters took a few of the hogs and some were tested for pseudorabies and swine brucellosis. The hogs were positive for pseudorabies and the Missouri Department of Agriculture was forced to quarantine the National Forest. This quarantine cost the Mark Twain National Forest a considerable amount in personnel costs to eradicate the diseased hog population. As a result, sixteen agencies and organizations interested in swine production and land management joined forces to form the Missouri Feral Hog Task Force (Table 1). The mission of this task force as determined in its first meeting is:

1. To eradicate the feral hog from the state of Missouri. To do this, the Task Force reviews population control techniques and recommends the most effective ones to land management and agency personnel. The Task Force also tests trap designs, effort and success, and related baits and lures for effectiveness.
2. To record geographic locations of all sightings and attempt to obtain population trends at each location so that a state-wide map can be developed showing feral hog presence and intensity. To do this, the Task Force has posted signs asking the public to report sightings throughout the state at public land access points and in agency offices. The Task Force queries agency personnel annually to report new sightings and publish informational articles in appropriate periodicals to encourage public reports of feral hog activity. The Missouri Department of Conservation, a Task Force member, is developing an interactive map so that the public can post sightings directly on its website. Agency personnel follow up on

reports to determine if hogs are still present. Reports of feral hogs killed by hunters are also collected by agency personnel, and forwarded to a central data bank in the Wildlife Services State Office in Columbia, Missouri.

3. To obtain blood samples from hunters and agency personnel through the use of specialized blood sample kits for evaluation for presence of disease. The kits are available free from agency personnel throughout the state. The kits contain instructions and the necessary equipment to properly collect the blood, and are in postage paid preaddressed containers. Instructions encourage the samples be collected immediately after the hog is killed and dropped in the mail quickly so that they can be successfully analyzed at the Missouri Department of Agriculture Diagnostic laboratory in Jefferson City, Missouri.

The effort to eradicate feral hogs from Missouri will be long and difficult. They are difficult to find at low population levels, become nocturnal and/or move with heavy hunting pressure, survive well because they are omnivorous and have a prodigious reproductive capacity. Control efforts must focus on discouraging further releases of feral swine through education and enforcement, early detection of their presence, and the elimination of herds where they currently exist. At low population levels, the cost per animal will be high, but total eradication costs will pale in comparison to total damage costs from crop destruction and/or major disease outbreak(s) if these populations are not eliminated.

Table 1. Missouri Feral Hog Task Force Members

State Agencies	Missouri Department of Agriculture
	Missouri Department of Conservation
	Missouri Department of Natural Resources
Federal Agencies	U.S. Department of Agriculture, APHIS, Wildlife Services
	U.S. Department of Agriculture, APHIS, Veterinary Services
	U.S. Department of Agriculture, Mark Twain National Forest
	U.S. Department of Interior, Ozark National Scenic Riverways
	U.S. Department of Defense, Ft. Leonard Wood Army Base
	U.S. Department of Defense, Corps of Engineers Wappapello Lake, Truman Lake, Stockton Lake
Private Organizations	Missouri Farm Bureau
	Missouri Conservation Federation
	Missouri Pork Producer's Association
	Missouri Cattlemen's Association
	MFA, Inc.
	Missouri Consulting Forester's Association
Colleges	University of Missouri- School of Natural Resources

The Task Force developed a map (Figure 6) via GIS in 2005 to show the locations of all hog sightings for a five year period in relation to land ownership. Most hogs occurred on, or in close proximity to, federal or state managed lands in Missouri.

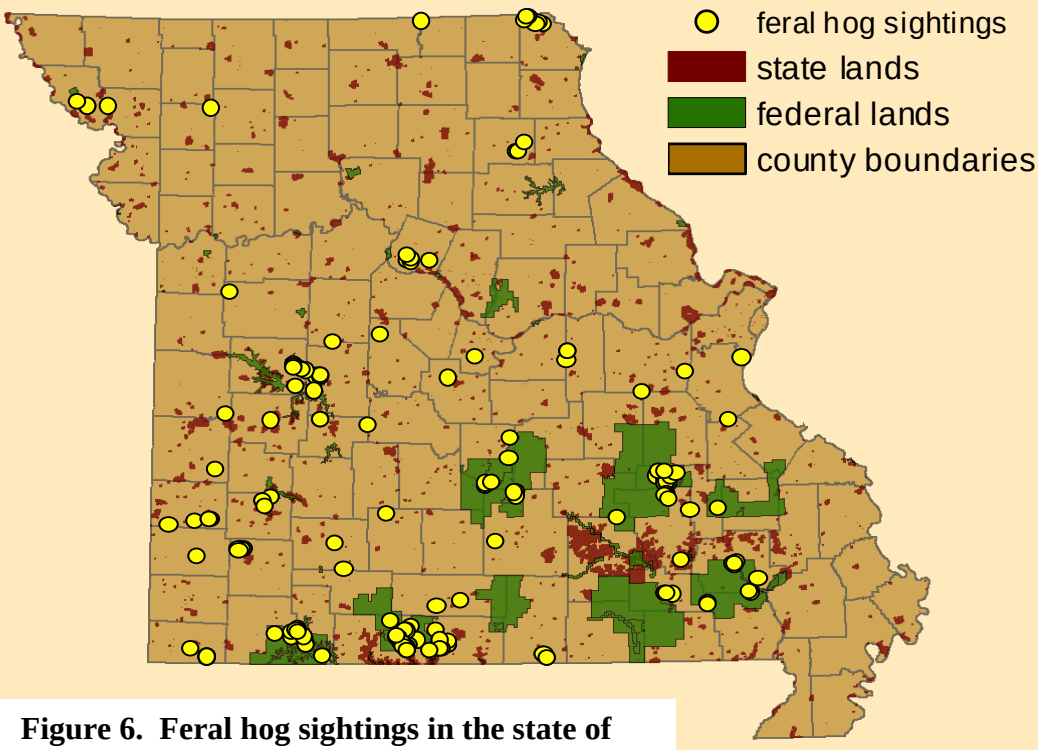

Figure 6. Feral hog sightings in the state of Missouri for years 2000-2005.

The Task Force decided that public education was a critical element in gathering hog information and in the eradication process. An outreach and education plan was developed including all agencies and organizations.

Public Policy, Education, and Information

Outreach and education efforts must continue to raise awareness of hunters, landowners, and the general citizenry. Articles have appeared in the Missouri Conservationist, MDC's All Outdoors, Missouri Pork Producer's Magazine, Missouri

Farm Bureau's Show Me, Missouri Cattleman, Missouri Conservation Federation's Missouri Wildlife, The Joplin Globe, and St. Louis Post Dispatch, The Kansas City Star, River Hills Traveler, Springfield News-Leader, West Plains Daily Quill, Kirksville Daily Express, Wayne County Journal Banner, and St. Joseph News-Press. MDC staffs have been interviewed for the MDC's radio show, KUMZ, and the Missouri Farm Net (T. Hutton, APHIS, pers. communication.).

Information on feral hogs is available on Missouri Department of Conservation's website (www.conservation.state.mo.us), in the Summary of Missouri Hunting and Trapping Regulations and has been featured at MDC's booth at Missouri Cattlemen's, Farm Bureau, State FFA, and Soil and Water Conservation District conventions and the Governor's Conference on Agriculture, and at Wildlife Services' booth at the Missouri Natural Resource Conference. In addition, presentations have been given to the United Bowhunters, the Conservation Federation's annual meeting, National Wild Turkey Federation Board of Directors, Farm Bureau's Conservation-Ag Conference, Agricultural Leadership of Tomorrow workshop and MDC Wildlife Division's Training Conference. A special feral hog workshop was held at the 2005 Missouri Natural Resources Conference. Hog information magnets (Figure 7) have been distributed to individuals and agencies throughout the state to help gather sighting information. The magnets report phone numbers of the major agencies within the Task Force.

Figure 7. Example of magnet distributed by agencies to gather sighting information.

Informational posters (Figure 8) have been posted throughout the state at public access areas requesting information on hog sightings. Feral swine database submittal sheets (Figure 9) were developed to gather information from the public and agency personnel on sightings and removal of feral hogs throughout the state. USDA-Wildlife Services personnel developed the submittal sheets to gather uniform information on each reported hog sighting.

Wanted

Harvest reports and sightings of wild hogs.

YOU ARE ALLOWED TO SHOOT FERAL SWINE ON SIGHT!

Report sighting and kills of wild hogs to USDA-Wildlife Services at 573-449-3033x13, the Missouri Department of Conservation at 573-751-4115 x3147 or contact your local Conservation Agent.

Legal status

Missouri Statutes

Missouri statutes, MRS Chapter 270, state that …Any swine not conspicuously identified by ear tags or other forms of identification that was born in the wild or lived outside of captivity for a sufficient length of time to be considered wild by nature by hiding from humans or being nocturnal shall be considered feral hogs…Any person may take or kill a feral hog on public land or private land with the consent of the landowner; except that, during the firearms deer and turkey hunting season the regulation of the Missouri Wildlife Code shall apply.

Wildlife Code

Feral hogs may be taken in any number throughout the year. During most of the year, no permit is required and any method, including baiting and the use of dogs, is allowed. However, ***special restrictions apply during the fall firearms deer and turkey hunting seasons***.

During <u>all</u> portions of the FALL FIREARMS DEER and TURKEY seasons:

- you must possess a valid, unfilled firearms deer, turkey, or small game hunting permit;
- you must abide by the methods of pursuit allowed for deer and turkey (*e.g.*, baiting is *not* allowed ten days prior to or during firearms deer and turkey seasons; see *Methods of Pursuit*, page 3);
- you must abide by any other restrictions that may apply on specific public areas.

During the November portion statewide and the **Antlerless-Only portion** in open units:

- if you have a deer permit you may only use methods allowed for deer;
- if you have a small game permit you may only use a shotgun with shot not larger than No. 4;
- you may *not* use dogs to hunt feral hogs during these portions of the firearms deer season.

During the Youth-Only and Muzzleloader portions statewide and the **urban portion** in open units:

- if you have a deer permit you may only use methods allowed for deer;
- if you have a small game permit you may only use methods allowed for small game.

NOTE: Resident landowners and lessees (see *Definitions*, p. 4) on their land are not required to have any permit and they may use *any* method or means to take feral hogs in any number throughout the year, including during the firearms deer (all portions) and turkey hunting seasons.

Blood samples

The Missouri Feral Swine Task Force is asking hunters to collect blood samples from freshly killed wild hogs. These blood samples are an important step in monitoring the health of wild and domestic swine. To obtain a free Feral Swine Blood Sample Kit, please call USDA-Wildlife Services at 573-449-3033 x13, the Missouri Department of Conservation at 573-751-4115 x3147 or contact your local Conservation Agent.

Figure 8. Missouri Feral Hog Task Force sign.

Feral Swine Database Submittal Sheet

Contact Name and Address			
Farm name			
First name	Last name		
Address	City	State	Zip code
Phone number	Cell Phone	E-Mail	

Event data						
Date	Agency employee 1st hand		Civilian 1st hand	Reporting name		
	Yes No		Yes No			
Number seen	Number killed	Number released	Fresh sign only			
		0	Yes No			
Latitude		Longitude		Township	Range	Section
County	Comments					

Swine data						
Killed	USDA Trap		USDA Shot	Hunter Killed	Other Killed	
Yes No	Yes No		Yes No	Yes No	Yes No	
Color	Weight	Sex		Age	Specific Age	
		MALE	FEMALE	J A U	0	
Lactating	# fetuses	fetuses age	# male fetuses	# female fetuses	Blood test	
Yes No						

Please fax or mail to:
USDA-Wildlife Services 1714 Commerce Ct. Suite C
Columbia, MO 65202 Office 573-449-3033
Fax 573-449-4382

Figure 9. USDA Wildlife Services Data Sheet to collect information from the public.

Disease Surveillance

Diseases can be controlled within the wild hog population through constant monitoring and localized eradication when the disease is found. *Brucella suis* and the pseudorabies virus are infectious pathogens of economic importance to domestic swine producers and are the focus of national eradication campaigns (Gresham 2002). Animal and Plant Health Inspection Service (APHIS), Wildlife Services (WS) is assisting the state of Missouri in gathering this information by providing blood sample kits for the detection of these diseases to Conservation Agents and hunters throughout the state. These kits include all necessary equipment to collect the blood samples for submission to the Missouri Department of Agriculture's Diagnostic Lab with no cost to the person submitting it. The States' classification as disease free is in jeopardy if wild hogs are found to be positive for either swine brucellosis or pseudorabies. Little is known about the prevalence of disease in feral hogs and this research should provide valuable information about populations, diseases, and control methods.

Law Enforcement

The chairman of the Missouri Feral Hog Task Force created a law enforcement subcommittee to determine ways to prosecute people involved in illegal hog releases. The subcommittee included law enforcement personnel from the Missouri Department of Conservation, Mark Twain National Forest, U.S. Army Corps of Engineers, and Missouri Department of Agriculture. The subcommittee's task was to determine the best approach to enforce state and federal laws on public and private lands.

Obviously, continued releases make efforts to eradicate hogs even more difficult. The subcommittee worked on language to be submitted to the state legislature to make

the release of hogs illegal. The passage of "Feral Hog Statutes" in 2002 provided an important tool to address the problem. Some people who are releasing swine may be unaware of their negative characteristics and will discontinue releases upon learning of the feral hog statutes and associated penalties. Other people are making releases knowing the consequences full-well and disregarding the interests of agriculture, forestry, native wildlife and their fellow citizens. Capture and prosecution of persons involved in these activities should have a high priority as a deterrent. A special "sting" operation was conducted in early 2005 and several people were prosecuted for illegally releasing hogs for hunting purposes. Most releases took place on Federal or state lands in hopes to establish huntable populations. Illegal guide hunting operations on the Mark Twain National Forest were also prosecuted.

Detection

Finding low densities of feral swine to target for elimination is difficult. Control efforts have, and will continue, depend on sighting reports from governmental agency employees, rural landowners, and the general public. Public information encouraging the public to report new sightings is critical for control to be effective. The public has been asked to report any sightings of feral hogs. Hunters are encouraged to watch for tracks, droppings, and rubs in forested areas as sign of feral hog presence.

Control Methods and Techniques

Control will be conducted through a collaborative multi-agency approach. The efforts will review the control methods that are available, assess the efficiency or feasibility of these methods, and describe the methods that are recommended in Missouri. Hogs can be controlled with exclusion, snares, dogs, live traps, shooting, and aerial

hunting. There are no toxicants, repellants, fertility agents, or biological control agents registered for use against feral hogs in the United States. Such products have had limited success in other countries, but the cost of developing and registering them for use in the U.S. has been prohibitive (Barrett and Birmingham 1994).

Control methods can be modified and specifically designed to be effective for feral hogs. This information will be invaluable for the agencies involved in the eradication process. Corral or free standing traps can be loaned to private individuals to use on their property to reduce hog populations. Public land agencies also will use various methods to prevent hog establishments on public lands of the state. APHIS-Wildlife Services personnel will utilize various capture techniques and work with the public to test their effectiveness. Most control equipment will be utilized by landowners or land managers with WS personnel providing the required technical assistance.

Feral swine have the greatest reproductive potential of all free-ranging, large mammals in the United States (Wood and Barrett 1979). Once feral hogs have become established in an area they are nearly impossible to eradicate. However, with an integrated approach one can control the size of the population and keep hog damage at an acceptable level.

Exclusion

Modifying habitat, changing animal husbandry practices, and building fences are ways that feral hogs can be excluded from an area. However, these methods may be cost prohibitive, especially over large acreages. Farmers considering using fencing to control feral hog damage have to choose between modifying an existing fence or building a new one. Electrification is the cheapest and simplest method of modifying existing fences.

Hone and Atkinson (1983) reported that modifying existing fences by use of a stand-off wire will significantly reduce the percentage of hogs crossing fences and increase the time taken to do so. Unfortunately, fencing seldom controls hogs permanently. They eventually find their way through most fences, regardless of the design. Also, fences have to be maintained, which increases the costs. Hogs have escaped fenced corral traps with panels as high as six feet (2 meters) (Dan McMurtry, APHIS, personal consultation).

Snares

Snares are excellent tools for managing feral hogs. They can be placed on fences where hogs are crossing or along hog trails. A snare consists of a flexible wire cable loop, a sliding lock device, and a heavy swivel (Figure 10). The cable should be either 3/32 or 1/8 inch in diameter and up to 48 inches long.

Figure 10. Example of neck snare set for hogs.

Neck snares restrain hogs with a 12-to 18-inch-diameter loop that is securely attached, via the swivel, to a fence or other firm object, or to a drag. An extension cable at least 3 feet may be needed to reach posts, trees, or other stable structures. The snare loop should be suspended above the ground with wire clips or small gauge metal wire.

Leg snares also can be used along hog trails. Leg snares, which are placed on the ground, have smaller loops and are activated when an animal triggers the mechanical throwing arm. All snares need to be checked daily.

Snares have several pros and cons. They are relatively inexpensive, require minimum equipment for installation, and need little maintenance. However, they will catch a variety of animals (including dogs and deer), not just hogs. Snares need to be located where the chance of catching nontarget animals is minimized. Missouri Wildlife Code requires a person to have a special Missouri Department of Conservation permit from the Conservation Agent before snares can be used. Snares should only be used by individuals with extensive experience to limit the take of non-target animals.

Anderson and Stone (1993) used snares for the first successful eradication of pigs in a fenced, remote Hawaiian natural area. Sex and selectivity were not apparent in snaring. Snares were anchored to trees and suspended 5-20 cm above the ground, an effective height range for capturing either adult or young pigs around the neck. Snares were checked on subsequent trips for catches and condition and reset or removed when necessary.

Corral/Cage Traps

Corral traps (Figure 11) are often used for feral hogs and have several advantages. They interfere little with normal hog behavior, can be either permanent or portable fixtures, can catch several hogs at once depending on the size and design of the trap, and allow the trapper to release any nontarget animals that are caught. Captured hogs can be slaughtered and processed for food. Trapped hogs should not be relocated alive from the

trap site. Releasing feral hogs is not recommended because they are destructive and may transmit disease. No permits are required on private property to set traps for feral hogs.

Figure 11. Corral trap with rooter gate.

Cage traps for feral hogs come in a variety of designs and shapes. Most are constructed of livestock panels with a steel pipe or angle iron frame. The primary differences between trap designs are size, portability, door configuration, flooring, or roofing. Any trap needs two elements to function properly: a reliable door and stout enough materials to hold trapped hogs. Trap materials consisting of heavy steel and wire panels are necessary to keep hogs from escaping. Door designs include drop gate/slide door, rooter/lifter gates, and spring/swing gates. Drop gates use a trip wire to trigger the door. Rooter or lifter gates require that the hog use its nose to lift or root open the door. Spring or swing gates use a screen-door type spring to close the door after hogs push it open. Doors or gates can be hinged from the top or the side of the trap. Some trap designs just use paneling fashioned as a funnel or door into the trap. Doors should open in only one direction so hogs can get in, but not out. Floors and/or roofs can be used on

traps to ensure that hogs do not dig underneath, jump out, climb over, or otherwise escape. The most popular styles of cage traps are corral traps, panel traps, box traps (Figure 12), and portable traps.

Figure 12. Portable cage trap with rooter gate.

A successful trapping program requires that traps be placed in areas where feral hogs are active. Pre-baiting for several days will get hogs used to entering the traps. This is accomplished by wiring the door or gate open until hogs are no longer wary of the trap. Hogs can be baited with fermented corn or grain, whole corn, livestock pellets or cubes, vegetables, fruit, or carrion. Once hogs are entering the trap regularly, the trap door can be set to capture them. The importance of free-feeding traps to allow feral pigs to become accustomed to walking through the door cannot be over-emphasized. It also is important to regularly check traps being free-fed and to replace consumed bait, because feral pigs lose interest in the absence of bait (Caley 1994).

Traps should be checked daily and from a distance when possible. Unnecessary activity around the trap site may cause hogs to avoid it. Personnel must be careful when approaching traps that contain hogs as the animals will become excited and may escape.

With multi-catch traps, a decoy animal can be left in the trap to help entice other hogs to enter. Decoy animals should be fed and watered daily. Trapping should continue until the desired number of feral hogs has been captured or until no further hog activity occurs at the trap site. Trapping is most successful during cooler months.

Personnel from APHIS-Wildlife Services have been building the corral and cage traps. A breakdown of the costs of building traps can be found in Table 2. The complete plans for the corral trap and the cage trap can be found in Appendix A.

Table 2. Approximate costs to build hog traps, 2005.

Complete Kerrville Rooter Trap Cost			
Item	**Rate**	**# Hours**	**Total**
Labor	$25.00	8	$200.00
Paint			$3.00
Shop supplies			$3.00
Metal			$90.00
10-'T' posts		at $4.00 per	$40.00
3-Wire Panels		at $38.00 per	$114.00
Wire			$2.00
		Total cost	**$452.00**

Kerrville Rooter Trap Cost-Door only			
Item	**Rate**	**# Hours**	**Total**
Labor	$25.00	8	$200.00
Paint			$3.00
Shop supplies			$3.00
Metal			$90.00
Wire			$2.00
		Total cost	**$298.00**

Complete Hog Cage Trap Cost			
Item	**Rate**	**# Hours**	**Total**
Labor	$25.00	10	$250.00
Paint			$3.00
Shop supplies			$3.00
Metal			$100.00
2-Wire Panels		at $38.00 per	$76.00
		Total cost	**$432.00**

Shooting

Hogs can be shot when the opportunity arises, but this usually will not substantially reduce the population. Shooting from ground level can be effective if it is intensive and if the hog population is small. Feral hog hunting can take place year-round, but most hunters take feral hogs incidental to deer hunting.

Sport hunting (Figure 13) is used in certain areas to reduce wild pig densities. Success is highly dependent on local situations and terrain. Hunting is not recommended if there is a serious depredation or disease problem since the hunting pressure can disperse the hogs to new areas. Unsuccessful hunting will make wild pigs nocturnal and thus, harder to control (Barrett and Birmingham 1994).

Figure 13. Shooting can be successful using center fire rifles.

Hunting techniques for feral hogs are essentially the same as those for white-tailed deer (*Odocoileus virginianus)*. Stand hunting or still hunting can be conducted in baited areas or in areas with abundant, fresh, hog sign. Hog sign is defined as tracks, droppings, rooting, or rubbing on trees. As feral hogs are attracted to supplemental

feeding sites or deer feeders, these can be prime areas for hunting feral hogs. However, feral hogs are intelligent and can be dangerous or difficult to shoot. Intensive hunting may cause feral hogs to shift their home range or become more nocturnal. When this happens, hogs can be hunted at night using a spotlight with a red filter with approval from the local conservation agent. Eradication of hogs from an area is unlikely through hunting only.

Hog Hunting Dogs

Hog hunting dogs (Figure 14) can be an effective tool to reduce feral swine, especially at low population levels. Trained dogs can be used to locate individual hogs or small groups of hogs. In fact, the use of dogs to trail and bay (temporarily hold the hog in one place by surrounding and barking) hogs is a hunting method that has been used for many years. Success will depend on the experience of the dogs and the hunter. Most hunters use tracking dogs to find and bay hogs, while relying on catch dogs to hold hogs once bayed. Tragically, the major disadvantage to this technique is that dogs are often injured or killed by hogs. Hog hunting dogs are being used by some private individuals in Missouri and it may be possible to enlist their services for priority areas in the future.

Caley and Ottley (1995) reported that hunting with dogs is an effective way for removing hogs after densities have been reduced by other forms of control. They also reported that dogs were successful on 88% of occasions of catching or cornering solitary pigs when encountered. This rate of success rapidly declined as the group size of encountered hogs increased, with the mean maximum number of hogs that could be caught or cornered in any one encounter estimated to be about one hog per dog. In theory, hunting dogs could catch or corner hogs that have become bait-shy or trap-shy.

McIlroy and Saillard (1989) reported that short-term hunting with dogs will not cause pigs to disperse widely or affect the success of subsequent captures.

Figure 14. Hog hunting dog with Kevlar vest for protection.

Aerial Hunting

Aerial hunting from helicopters (Figure 15) can substantially reduce feral swine numbers, especially in open country. Hone (1990) reported that the abundance of feral hogs can be greatly reduced by intensive shooting from a helicopter. His study in Australia's Northern Territory showed a 79% reduction. While aerial hunting is useful in open areas, it is not as effective as in forested or hilly areas (e.g. Ozarks). Helicopters also can be useful in locating feral swine herds or fresh sign after leaf drop and before leaf out, with or without snow. MDC and USDA-Wildlife Services personnel provided a combined effort between ground personnel and a helicopter surveillance crew had no luck in finding feral hogs from a known source in Howard County and also around Truman Reservoir. Even with intense aerial surveillance and a widely-scattered ground crew, no hogs were observed moving or trying to escape the area.

Figure 15. Low level aerial hunting can be used in open terrain.

The Missouri Department of Conservation's helicopter has been used to eliminate feral swine on conservation areas and remains available for control activities on the areas and for surveillance in the immediate vicinity. Helicopters are labor efficient, offering a potentially quick reduction of the pig population over a wide coverage of land, especially if that land is flat, open terrain (Saunders 1993).

Figure 16. Aerial hunting using a shotgun with heavy buckshot.

With proper state permits and licenses, aerial hunting (Figure 16) is a legal method of controlling feral hogs in many states. Most aerial hunting is done with

helicopters. There must be an experienced pilot and a capable gunner. Aerial hunting can stop damage problem quickly and is highly selective because only targeted animals are killed. Aerial hunting also can be used in areas that are inaccessible to other management methods. Depending on the amount of damage hogs are causing, the benefits of an aerial hunt can far outweigh the costs (which can be $400 or more per hour flown).

Like all other control methods, aerial hunting has limitations. Rough terrain, poor weather, heavy cover, high cost, and the inherent hazards of low-level flight are all factors. Dexter (1996) reported no significant differences existed in hourly distance moved by hogs, diel variation in distance moved by hogs, or home-range size of hogs, between a radio-tacking session conducted immediately before a shooting exercise from a helicopter and a radio-tracking session conducted during and after the exercise. The position of the home ranges of feral hogs did not appear to be affected by the shooting exercise, although several radio-collared hogs moved into, and out of, the study area between tracking sessions. Overall, the results suggest that the disturbance caused by shooting had little effect on the behavior of surviving feral hogs. Aerial hunting is usually conducted by government agencies only and not allowed by the general public. Many states make aerial hunting illegal.

Saunders and Bryant (1988) reported that intense aerial hunting was not enough to remove all feral swine from an area. They determined that (1) post-shooting populations contained pigs which learned to hide on the approach of the helicopter, (2) the post-shoot population contained a higher proportion of pigs which lived in thick vegetation and hence, were less likely to have been shot, and (3) that groups of pigs are more sightable

and they are more likely to be shot than single pigs thereby producing a higher proportion of single pigs.

Judas Pigs

The use of "Judas Pigs" holds the best promise of providing some assurance that all feral swine have been eliminated in an area. The "Judas pig" technique involves attaching radio-telemetry collars to trapped, feral sows after they have tested negative for diseases and sterilized to prevent reproduction and then released back in the same area to join other hogs. Periodic checks determine their location and allow strategic placement of traps to catch swine in that area, or allow marksman to shoot swine associating with the "Judas pig." The "Judas pig" is removed when there is reasonable assurance that it is the only remaining feral hog in the area.

This technique has limitations. McIlroy and Gifford (1997) reported there was no difference in the number of resident pigs with which each type of adult "Judas pig" came into contact, it really only works well in terms of time to contact and how often they can be found with other pigs if adult sows captured in the same area as the rest of the population to be controlled are used. This is presumably because such sows will be familiar with the area and are already part of the social groups there. They also reported that although adult boars did come into contact with slightly more pigs than did the other "Judas pigs", the adult boars were much slower to make contact and were located with them only infrequently. Such brief contacts are probably related to mating opportunities. This technique may be very useful to enhance disease control programs. In such circumstances, the "Judas pigs" could be used initially to monitor the spread of the disease or later to confirm that the disease had been eliminated. It also has considerable

potential to facilitate eradication of small populations of feral hogs, particularly where they are sparsely distributed or occur in largely inaccessible or remote areas such as wilderness areas (McIlroy 1997). The technique requires expensive equipment ($260 per transmitter, $2,000 per receiver) and some operational skill to precisely located collared individuals (Tom Hutton, APHIS, personal consultation).

Conclusion

Missouri feral hog populations seem to be expanding and increasing. Most of the expansion has been due to the illegal releases by individuals to create huntable populations in various parts of the state. Extensive law enforcement and the use of public relations will be vital to educate the public to the hazards feral hogs represent to the environment. Hog eradication is not likely in the state unless funding was allocated so that the agencies could exert extensive control efforts. Hunting by the general public is not likely to eradicate hogs as they become more nocturnal and harder to find. Most hunters will reduce hunting activities in particular sites as the success rate drops.

Meetings between federal and state agencies, commodity groups, wildlife associations and other pertinent groups will be required to resolve this situation. It will be important to convey and reach agreement on the following items (Witmer et al. 2003):

1. The importance of protecting the health of people, livestock and wildlife.
2. The strong economic incentive to protect the livestock industry, both domestic and export, as well as highly-valued wildlife resources.
3. Feral swine populations pose serious threats to humans, livestock and natural resources.

4. To assure that agricultural lands are safe and accessible to both livestock and wildlife.

Additional research needs to be conducted to determine the actual costs associated with each of the control methods listed in this text. Trapping and shooting were the only methods actually implemented by the agencies involved in Missouri's feral hog reduction activities. They were also the only methods recommended to the general public. Other methods may be needed in the future at which time costs can be calculated to determine the efficiency in relation to the effectiveness to determine feasibility.

Agency personnel will continue to promote training and better information on blood collection techniques so that the number of usable samples can be increased. The need for the blood samples to be collected by the general public will require additional public information releases. The general public has been instrumental in submitting blood samples to be tested and will continue to be important as long as the public agencies budgets are tight.

Bait formulations need to be developed so that non-target animals such as white-tailed deer and turkey are not eating all of the available bait at trap sites. Fermented grain formulations work well for hogs but are also consumed by other animals.

Chapter 2

Status of Diseases in Feral Hogs in Missouri

Pseudorabies (USDA 2000) and Swine Brucellosis (USDA 1998) are among the several livestock diseases for which the USDA Animal and Plant Health Inspection Service (APHIS) has established national goals of eradication from all livestock in the United States. Unfortunately, one of the most serious setbacks to achieving this goal is the widespread and growing occurrence of feral swine (*Sus scrofa)* populations across the country. Feral swine harbor and transmit these and other diseases (e.g., Classical Swine Fever, Foot and Mouth Disease, Rinderpest, Swine Vesicular Disease and Vesicular Stomatitis) (Geering 1981). In some areas, feral hogs may serve as the most important wildlife host.

Missouri is one of the largest livestock producing states in the nation. The Missouri Agricultural Statistics Service (2003) reported that the state ranks sixth in the nation in pork production and second in beef cow production. If the livestock industry of this state was exposed to a serious disease outbreak, economic impacts would be far reaching, affecting not only production agriculture but allied industries. The importance of controlling a burgeoning feral swine population is therefore critical to Missouri in maintaining its current status of disease free (no disease reported within the State in a designated time period) for both Pseudorabies and Swine Brucellosis.

Feral hogs are known to spread numerous diseases and parasites to livestock and deer (*Odocoileus spp.)* (Beach 1993). A study involving 100 wild hogs collected from ten different populations in Texas found that feral hogs represented a reservoir for

diseases, including Pseudorabies, Brucellosis, and Leptospirosis (Corn et al. 1986). Eliminating these diseases from feral swine populations would reduce losses of highly-valued wildlife resources and lessen the risk to humans of some diseases.

A goal of the USDA and the Missouri Department of Agriculture is to reduce the risk of disease transmission from free-ranging wildlife, and in particular, feral swine, to livestock so that national plans to eradicate several diseases from livestock in the United States can be accomplished. Eliminating diseases or reducing prevalence in feral swine populations will require the establishment of both operational and research-based programs for monitoring and management of disease occurrence and transmission by wildlife (Witmer et al. 2003).

History of Feral Hogs in America

Hogs have been present in Texas since the 1680s and were important livestock to the early settlers, who usually allowed their animals to roam free (Mapston 2004). Early settlers often left animals to fend for themselves. Thus, many free-ranging, domesticated hogs became feral over time. Feral hogs in Florida number more than 500,000 (Layne 1997). Texas reports numbers in excess of 1.5 million (Mapston 2004).

History of Feral Hogs in Missouri:

During the settlement of Missouri, livestock legally were allowed to roam freely and it was the responsibility of landowners, not livestock owners, to fence their properties to exclude hogs and other livestock. State law was changed in 1873 allowing individual counties to decide who was responsible for fences to control livestock. “Free range” ended for the whole state in 1969 (T. Hutton, unpublished report).

Since 1969, there have been feral hogs in a few Missouri Counties, primarily south of Interstate 44. These populations have been sporadically augmented by intentional releases or accidental escapes in those and other counties. Locations that have had hogs for the last ten years include Mark Twain National Forest in Barry, Stone, and occasionally in other counties. Hogs also occurred on the Missouri Department of Conservation (MDC) White Ranch Conservation Area in Howell County prior to its acquisition in the early 1980s (T. Hutton, APHIS, pers. commun.).

In the early 1990s, some people began raising and promoting European wild boar (*Sus scrofa)* as a form of alternative agriculture and for hunting on controlled-shooting areas. Also in the early 1990s, domestic pork prices plummeted and hogs were released by owners rather than suffering losses trying to raise them.

Because feral hogs tend to occupy the same areas as deer and livestock, disease and parasite spread is possible. One of the most probable points of contact is at communal watering holes. Due to its inability to thermoregulate, the hog is attracted to watering areas to wallow (Belden and Pelton 1976). Infected hogs can spread parasites and diseases through both direct contact and by contaminating drinking water. Contamination of a watering hole with urine is consistent with the hog's wallowing behavior (Beach 1993).

Missouri's Swine Industry

If the livestock industry of Missouri were exposed to a significant disease outbreak the economic impact would be far reaching, affecting not only production agriculture but allied industries. An accidental or terrorist introduction of a foreign animal disease (FAD) to the Missouri livestock industry would impact the entire U.S.

society, causing a loss of confidence in food safety. A foreign animal disease in Missouri would eliminate sales in the international export market.

The introduction of Psuedorabies or other program diseases back into the Missouri swine industry would have a significant impact. It is estimated that eradication efforts to bring the state back to a "Free" status would cost the economy between one and two million dollars (Ray Wadley, Missouri Department of Agriculture, pers. commun.).

Swine Brucellosis (SB)

(Following adapted from unpublished report, Dr. Gene Eskew, Staff Veterinarian 1981, Oklahoma Department of Agriculture)

Brucellosis, caused by *Brucella suis,* is a chronic disease of hogs manifested by arthritis, or posterior paralysis, sterility and abortion in sows, high rates of pig mortality, and orchitis (inflammation of the testicles) in boars. *Brucella suis* is more resistant to environmental conditions than *Brucella abortus*, and may survive in feces, urine, and water from four to six weeks. The organism causes disease only in pigs and man, although other species may be infected and further transmit the disease. In swine, susceptibility is much higher in adults than in young pigs.

The disease is spread by oral ingestion and by coitis. Wild animals, such as rabbits (*Sylvilagus spp.*) and rats (*Rattus spp.*) may provide a source of infection, and ticks are also suspected of transmitting the disease. Spread through a herd may be rapid because of conditions under which domestic swine are raised. The severe effects of the disease subside quickly as herd resistance is increased. Swine Brucellosis is most significant as a public health hazard for packinghouse workers, butchers, and others

having close association with the live animal or carcasses. This disease in humans is a very severe, chronic debilitating disease with poor response to treatment. The number of animals affected in an infected herd may be quite low (five to ten percent). Although infertility and reduced reproduction can be of significant economic importance, the death of piglets in the first month of life may be as high as eighty percent. Older animals may additionally show posterior paralysis and a generalized arthritis and swelling of the various lymph nodes.

Diagnosis of Swine Brucellosis is difficult by symptomatology and lesions alone. Positive serology is generally required for definitive diagnosis. The control of Swine Brucellosis is generally achieved by following a plan whereby the herd is depopulated or is tested each thirty days until two negative blood samples have been obtained. For the herd to be considered disease free, the first negative blood sample should be thirty days following the removal of the last known positive animal with the second test at least ninety days from the first test. Because of the resistance of the organism to environmental conditions, it is often necessary to clean and disinfect pens, houses, and equipment, or to leave these facilities empty for a minimum of six months.

Pseudorabies (PRV)

Pseudorabies is an infectious, often very acute, alpha herpes viral disease of feral swine that also occurs in domestic livestock, cats, and dogs (Romero et al. 1997). Pseudorabies is not a zoonotic disease so humans are not infected. Pseudorabies is also known as Aujesky's disease, mad-itch, and pseudo hydrophobia. The disease was first reported in naturally infected oxen, cats, and dogs. Up to the early 1960s in the United States, Pseudorabies virus was found in young domestic swine and caused limited

amounts of mortality. After that date, more virulent strains began to occur and losses among adult swine were observed. Now, PRV commonly causes abortions and mortality in adult sows (Romero et al. 1997). The disease in swine may be spread by asymptomatic carriers; carnivores are readily infected by contact or ingestion of infected tissues or carcasses. PRV has been implicated as an infrequent cause of mortality among numerous wildlife species including coyotes (*Canis latrans)*, black bears (*Ursus americanus*), brown bears (*Ursus horribilis*) , mink (*Mustela vison*), raccoons (*Procyon lotor*), and the endangered Florida panther (*Felis concolor*) (SCWDS Briefs, April 2004).

The signs of Pseudorabies vary widely from species to species, but anorexia, excessive salivation, spasms, and convulsions are usually observed in all species. Transmission of the PRV may occur through direct contact, aerosols, contaminated feed, water, ingestion of infected tissues or contaminated footwear, clothing, or trailers. Diagnosis is usually made from clinical signs and variety of serological tests.

Prevention and control programs for PRV in domestic swine vary from test, isolation, removal and slaughter methods that may or may not be combined with a vaccination program to increase herd immunity and prevent spreading PRV. The only method to control PRV in feral swine is population control. Because of the potential risk to production agriculture, ecological systems, native wildlife, and human health there is a strong need for surveillance of feral hogs in Missouri to determine the status of Pseudorabies and Swine Brucellosis. Our goal was to assess the presence of those diseases in feral hogs in Missouri.

Methods

A few blood samples were collected and analyzed in Missouri as early as 1993. Beginning in 2002, federal and state employees, private landowners, and hunters began collecting blood samples opportunistically. Blood collection kits (Figure 17) were made available at no charge to private landowners and hunters through USDA-APHIS Wildlife Services' staff and MDC Conservation Agents. The kits contained all of the necessary supplies and instructions on how to take, preserve, and ship the blood specimens to the lab. As of March 2006, over 1,000 blood sample kits had been distributed to MDC personnel, managers, landowner, and hunters in Missouri. Over 500 were distributed in 2005. Blood samples generally have been collected and properly handled by government employees so that they are useable. The instructions called for blood to be collected immediately after a hog is killed and mailed to the lab. Private landowners and hunters were less diligent about submitting blood samples for testing and a higher proportion of those samples were hemolyzed therefore, unusable.

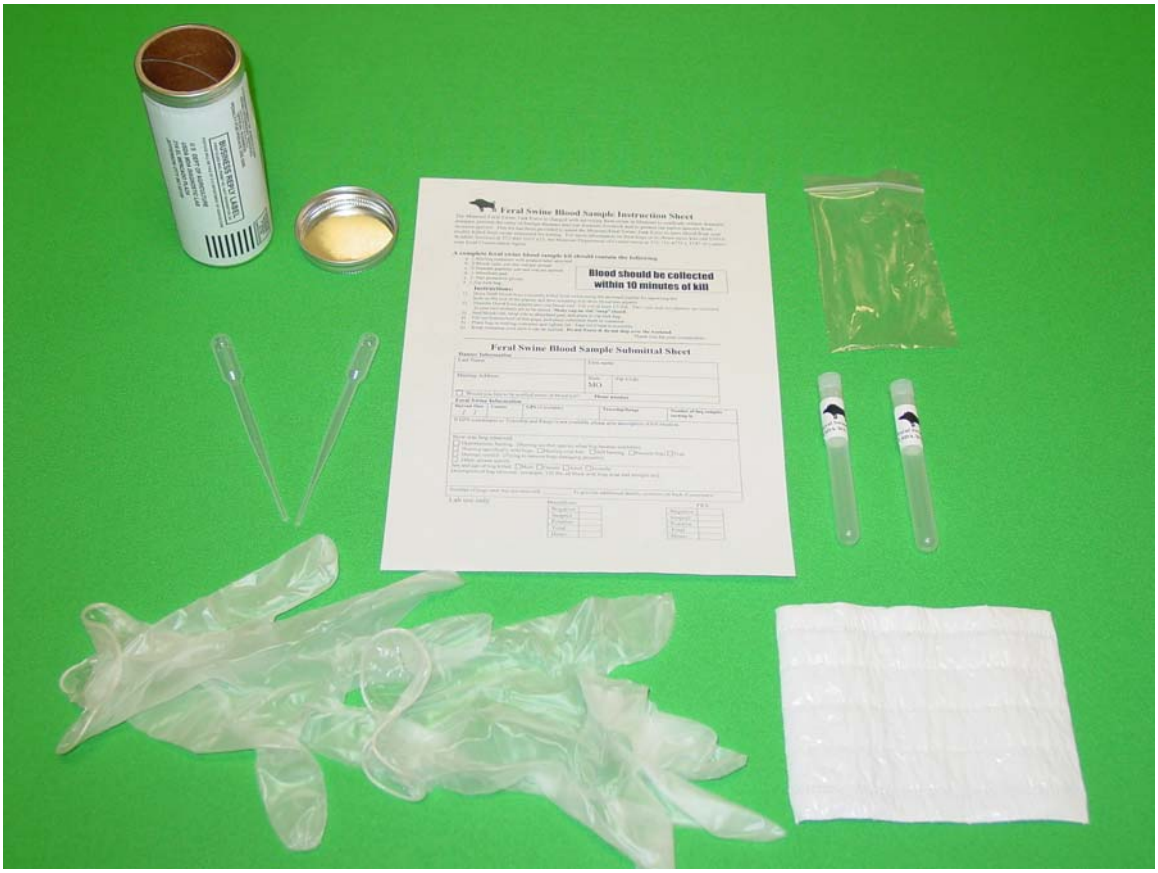

Figure 17. Blood sample kits that are available to the public.

The Missouri Department of Agriculture Diagnostic Laboratory in Jefferson City tested all useable blood samples as they were submitted. The *Brucella abortus* tests were conducted using the Buffered Acidified Plate Antigen (BAPA) Test or if needed to verify a suspect sample, the lab used the Particle Concentration Fluorescence Immunoassay (PCFIA). The National Veterinary Services Laboratory in Ames, Iowa provided the reagents for the BAPA test. Both are manufactured by IDEXX. The Pseudorabies tests were conducted via the gp1 Elisa (gene deleted test) that is manufactured by IDEXX or, if needed to verify a suspect sample, the Latex Agglutination Test manufactured by Viral Antigens was used. A portion of the blood was then sent to the USDA lab at Plum

Island, Virginia, where the test for Classical Swine Fever was conducted using the Elisa Test. The Diagnostic Lab then submitted aliquots of the same samples on to the Center for Disease Control to test for Tularemia in 2005.

Results

Twenty to thirty animals from the Irish Wilderness tested positive for Psuedorabies in the early 1990s. From 1993 through August of 2005, three hundred twenty-one feral swine were tested (Figure 18.). Eighty of those samples were obtained in 2005. None were positive for Pseudorabies. However, one animal, from Cole County, was positive for Swine Brucellosis in 1999**.** That population has since been eliminated. One hog, from Barry County, was positive for Tularemia in 2005. All of the tests were found negative for Classical Swine Fever.

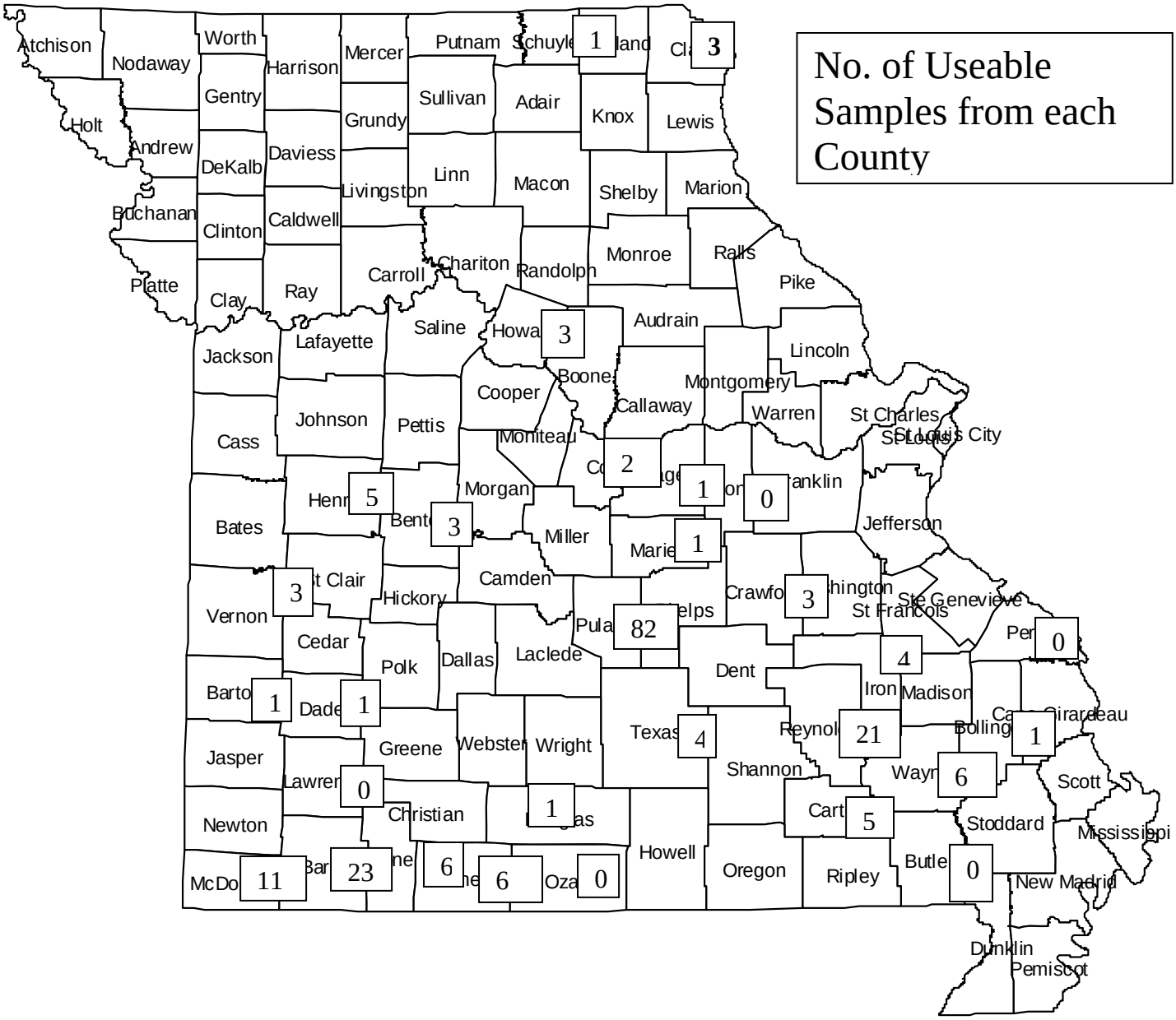

Figure 18. Disease sampling in Missouri's feral hogs, February 1993 – August 2005

Discussion

Whereas state and federal employees in Missouri have successfully reduced swine herds on their respective properties, many of the recent, active locations primarily involve private land. Recently appropriated federal funds provided much needed resources to target herds in Gentry, Shelby, Caldwell, Holt, Nodaway, Clark, Barton, Vernon, and Dade counties. At the same time, surveillance for feral Swine Brucellosis/Pseudorabies in Oregon County should receive priority because the last infected feral swine were found there in the 1990s. Herds in Howell, McDonald, Barry, Stone, and Taney counties need continued surveillance because they are close to U.S. Forest Service and U.S. National Park Service properties in northern Arkansas, which have reported having a significant proportion of feral swine infected with Pseudorabies and/or Swine Brucellosis. Figure 19 below shows reported sightings of feral hogs in association with enclosed domestic hog rearing facilities found throughout the state. The Missouri Department of Agriculture does not keep location records for transitional hog facilities. Transitional facilities are those that run domestic hogs in outdoor pens or pastures. They are the facilities that run the greatest risk of feral hogs getting in with their domestic swine and exposing them to diseases.

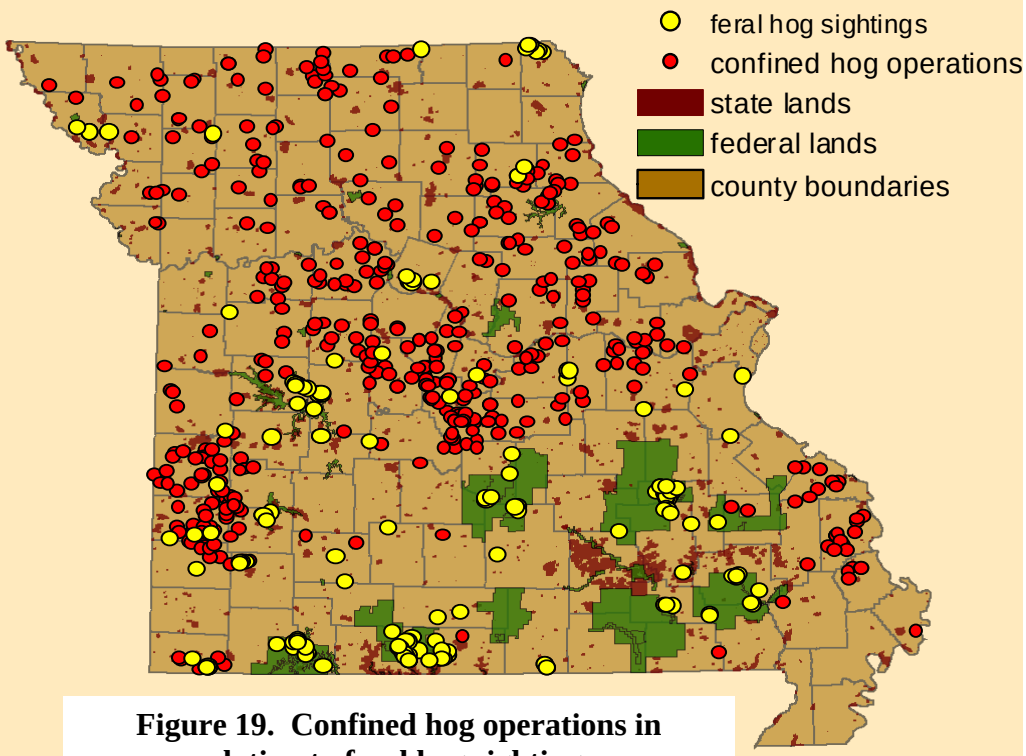

Figure 19. Confined hog operations in relation to feral hog sightings.

Missouri has been fortunate in that only one case of Brucellosis and no Psuedorabies have been found. The Southeast Cooperative Wildlife Disease Study group reported that nationwide, approximately 29% of over 14,200 wild swine were reported seropositive for Pseudorabies, and 9% of over 14,700 wild swine were seropositive for Swine Brucellosis (SCWDS Briefs, January 1995).

Pseudorabies is of considerable interest to swine producers worldwide because of the economic losses associated with reduced productivity and piglet fatalities. USDA initiated a nationwide PRV eradication program in 1989, and the disease has been virtually eliminated from U. S. domestic swine herds; however, PRV has been reported in feral swine from at least 10 states (SCWDS Briefs, April 2004). The persistence of

infection in feral populations, coupled with their expanding geographical distribution, has created the potential for reintroduction of virus to domestic herds.

The repercussions of diseased wild swine can be devastating. An example occurred in June 2005 when an Iowa hog farmer was treated for Undulant fever (Brucellosis). The swine operation in Southeast Iowa was tested for PRV and Brucellosis due to the owner's illness. Of 99 hogs tested, only 11 were negative for Brucellosis which spurred the Iowa Department of Land Stewardship to issue a written quarantine. In the summer of 2004, the owner reported seeing a feral boar enter his farm and clinical disease and abortions in his domestic swine were noticed in December of 2004. Over 400 domestic swine had to be killed to clean up the diseased farm. The farm remained under quarantine for approximately 90 days to make sure that Swine Brucellosis had been eliminated.

Annual pork sales in the United States exceed $1 billion with retail sales exceeding $34 billion (Witmer et al. 2003). There is concern relative to the role feral swine could pose to the pork industry as a reservoir for disease (Seward et al. 2003). Wildlife managers and agriculture specialists are concerned about expanding populations of wild hogs. As wild hog populations expand either through translocation or reproduction, the damage to agriculture, environmental degradation, competition with native wildlife, and the threat of diseases (if present) are increased.

Feral hogs pose a serious threat to livestock and hinder our ability to eradicate several important diseases of livestock in the United States. Disease outbreaks, involving risk to livestock, humans, and other wildlife are high profile, high priority situations that typically receive substantial attention and funding at both the state and federal levels.

Emergency funds are often made available for several years, but may quickly disappear when another disease suddenly appears and takes priority. Because of the wide occurrence of feral hog populations in the United States and the technical challenges posed by feral hog management, it is important for federal agencies to establish priorities on which states to address first in this effort and how to divide the limited resources available to conduct activities (Mackey 1991). Education efforts and collection instructions should emphasize the importance of timely sample collection and proper handling to increase the proportion of useable blood samples from these sources.

Although the goal of the Missouri Feral Hog Task Force is the elimination of feral hogs from the state, it may be more efficient to aim to eradicate the diseases as found within the feral hog population. This could be achieved by isolating any hogs carrying the disease and would not require the removal of all feral swine. This does not address the other damages that are associated with free-ranging feral swine.

Future Needs

The agencies involved in the Missouri Feral Hog Task Force have determined future needs to be addressed. The need for consistent funding at an adequate level to support three to four field personnel is imperative to control the spread and increase in feral hog populations. Continued disease surveillance is critical to be able to react to any diseases that may be found and eliminate them before they get started in the hog population. Research on better control methods and baits used to lure hogs also are needed. For Missouri, it is critical that the multi-agency task force continue to meet and address this issue since it affects all areas of public health, agriculture, conservation, and natural resources.

LITERATURE CITED

Anderson, S. and C. Stone. 1993. Snaring to control feral pigs, *Sus scrofa*, in a remote Hawaiian rain forest. Biological Conservation 63: Pages 195-201.

Baber, D. W. and B. E. Colblentz. 1986. Density, Home range, habitat use, and reproduction in feral pigs on San Catalina Island. Journal of Mammalogy 67:512-525.

Barrett, R. H. 1982. Habitat Preferences of feral hogs, deer, and cattle on a Sierra Foothill. J. Range Manage., 35:342-346.

Barrett, R. H. and G. H. Birmingham. 1994. Wild Pigs. Prevention and Control of Wildlife Damage. University of Nebraska Press. Pages D-65-70.

Beach, R. 1993. Depredation problems involving feral pigs. Pages 67-75 in C.W. Hanselka and J. F. Cadenhead (eds.) Feral Swine: A Compendium for Resource Managers. Texas Agricultural Extension Service, San Angelo.

Belden, R. C. and M. R. Pelton. 1975. European wild hog rooting in the mountains of Eastern Tennessee. Proceedings of the Annual Conference of the Southeast Association of Game and Fish Commissioners 29:665-671.

Caley, P. and B. Ottley. 1995. The effectiveness of hunting dogs for removing feral pigs. Wildlife Research 22:147-154.

Caley, P. 1994. Factors affecting the success rate of traps for catching feral pigs in a tropical habitat. Wildlife Research 21:287-292.

Choquenot, D., McIlroy, J., and T. Korn. 1996. Managing Vertebrate Pests: Feral Pigs. Bureau of Rural Sciences, Canberra.

Conley, R. H., V. G. Henry, and G. H. Matschke. 1972. European Hog Research Project W-34, Final Report. Tennessee Wildlife Resources Agency, Nashville. 259 pp.

Corn J. L., P. K. Swiderek, B. O. Blackburn, G. A. Erickson, A. B. Thiermann, and V. F. Nettles. 1986. Survey of selected diseases in wild swine in Texas. J. Mammals, 189: 1029-1032.

Davidson, W. R. and V. F. Nettles. 1997. Field Manual of Wildlife Diseases in the Southeastern United States, Second Edition. Pages 104-133.

Dexter, N. 1996. The effect of an intensive shooting exercise from a helicopter on the behavior of surviving feral pigs. Wildlife Research 23:435-331.

Davis, D. S. 1993. Pages 84-86 in C. W. Hanselka and J. F. Cadenhead (eds.) Feral Swine: A Compendium for Resource Managers. Texas Agricultural Extension Service. San Angelo.

Engeman, R. M., H. T. Smith, R. Severson, M. Severson, S. A. Shwiff, B. Constantin, and D. Griffin. 2004. The amount and economic cost of feral swine damage to the last remnant of a basin marsh system in Florida. Journal of Nature Conversation 12:143-147

Flynn, D. M. 1980. Vertebrate pest and exotic animal diseases. Australian Bureau of Animal Health report, June 1980.

Geering, W. A. 1981. Exotic diseases of pigs and Australian quarantine policy for importation of pigs. Univ. Sydney, Refresh. Course Vet., March 1981, Proc. No. 56.

Gingerich, J. L. 1994. Florida's Fabulous Mammals. World Publications. Tampa Bay. 128 pp.

Gipson, P. S., Hlavachick, B., and T. Berger. 1998. Range expansion by wild hogs across the central United States. Wildlife Society Bulletin 2:279-286.

Golley, F. B. 1962. Mammals of Georgia. University of Georgia Press. Athens. 218 pp.

Gresham, C. S., C. A. Gresham, M. J. Duffy, C. T. Faulkner, and S. Patton. 2002. Increased prevalence of *Brucella suis* and pseudorabies virus antibodies in adults of an isolated feral swine population in coastal South Carolina. Journal of Wildlife Diseases 38:653-656

Hellgren, E. C. 1993. Biology of feral hogs (*Sus scrofa)* in Texas. Pages 50-58 in C. W. Hanselka and J. F. Cadenhead, eds. Feral swine: a compendium for resource managers. Texas Agric. Ext. Service, College Station, Texas.

Hone, J. 1990. Predator-prey theory and feral pig control, with emphasis on evaluation of shooting from a helicopter. Wildlife Research 17:123-130.

Hone, J. and B. Atkinson. 1983. Evaluation of fencing to control feral pig movement. Wildlife Research 10:499-505.

Ingles, L. G. 1965. Mammals of the Pacific States. Stanford University Press. Stanford. 506 pp.

Jacobi, J. D. 1980. Changes in a native grassland in Haleakala National Park following disturbance by feral pigs. Proceedings of the Second Conference on Scientific Research in the National Parks 8:294-308.

Johnson, K. G., K. W. Duncan, and M. R. Pelton. 1982. Reproductive biology of European hogs in the Great Smokey Mountains National Park. Proceedings of the Annual Conference of the Southeast Fish and Wildlife Agencies 36:552-564.

Laycock, G. 1984. Hogs in the hills. Audubon 86:32-35.

Layne, J. N. 1997. Nonindigenous Mammals. Pages 157-186 in Simberloff D, Schmitz DC, Brown TC, editors. Strangers in Paradise. Washington (DC): Island Press

Lowery, G. H., Jr. 1974. The Mammals of Louisiana and its adjacent waters. Louisiana State University Press. 565 pp.

Mackey, W. 1991. The Implications of the importation of wild hogs on the northern United States. Proceedings Annual Meeting of the U. S. Animal Health Association. San Diego, CA. October 26-November 1, 1991. Pages 401-403.

Mapston, M. E. 2004. Feral hogs in Texas. Texas Cooperative Extension Service and USDA-APHIS-Wildlife Services booklet. 26 pages.

McCann, B., Davie, D. K., and G. A. Feldhammer. 2003. Distribution, habitat use and morphotypes of feral hogs (*Sus scrofa*) in Illinois. Transactions of the Illinois State Academy of Science 96:301-311

McIlroy, J. C. and E. J. Gifford. 1997. The 'Judas' pig technique: a method that could enhance control programs against feral pigs, *Sus scrofa*. Wildlife Research 24:483-491.

McIlroy, J. and R. Saillard. 1989. The effect of hunting with dogs on the numbers and movements of feral pigs, *Sus scrofa*, and the subsequent success of poisoning exercises in Namadgi National Park, ACT. Wildlife Research 16:353-363.

Nowak, R. M. 1991. Walker's Mammals of the World. The John Hopkins University Press. Baltimore. 1629 pp.

Pimentel, D.,L. Lach, R. Zuniga, and D. Morrison. 2000. Environmental and economic costs of nonindigenous species in the United States. BioScience Vol. 50, No. 1. Pages 53-65.

Ray, J. C. 1988. Wild pigs in California. A major threat in California. Fremontia 16:3-8.

Romero, C.H., P.N. Meade, J.E. Shultz, E.P.J. Gibbs, E.C. Hahn, and G. Lollis. 1997. Proceedings of the National Feral Swine Symposium. Pages 23-25.

Saunders, G. and H. Bryant. 1988. The evaluation of a feral pig eradication program during a simulated exotic disease outbreak. Wildlife Research 15:73-81.

Saunders, G. 1993. Observations on the effectiveness of shooting feral pigs from helicopters. Wildlife Research: 20:771-776.

Scott, C. D. and M. R. Pelton. 1975. Seasonal food habits of the European wild hog in the Great Smokey Mountains National Park. Southeastern Association of Game and Fish Commissioners 29:585-593.

Seward, N. W., K. C.VerCauteren, G. W.Witmer, and R. M. Engeman. Feral swine impacts on agriculture and the environment. USDA/APHIS/Wildlife Services, National Wildlife Research Center, 4101 LaPorte Ave., Fort Collins, CO. 80521-2154. 21 pages.

Taylor, R. B., E. C. Hellgren, T. M. Gabor, and L. M. Ilse. 1998. Reproduction of feral pigs in southern Texas. Journal of Mammalogy 79:1325-1331.

Tolleson, D. R., D. Rollins, W. E. Pinchak, M. Ivy, and A. Heirman. 1993. Impact of feral hogs on ground nesting gamebirds. Pages 76-83 in C. W. Hanselka and J. F.

Cadenhead, editors. Feral swine: a compendium for resource managers. Texas Agric. Ext. Service, Kerrville, TX.

Tolleson, D. R., W. Pinchak, D. Rollins, and L. Hunt. 1995. Feral hogs in the rolling plains of Texas: perspectives, problems, and potential. Great Plains Wildlife Damage Control Conference 12:124-128.

Towne, C. W. and E. N. Wentworth. 1950. Pigs from cave to cornbelt. Univ. of Oklahoma Press. Norman. 305 pp.

[USBC] US Bureau of the Census. 1998. Statistical Abstract of the United States 1996. 200th edition. Washington (DC): US Government Printing Office.

Van Vuren, D. 1984. Diurnal activity and habitat use by feral pigs on Santa Cruz Island, California. California Fish and Game Commission 70:140-144

Whitaker, J. O., Jr. 1988. The Audubon Society Field Guide to North American Mammals. Alfred A. Knopf, Inc. New York. 745 pp.

Witmer, G. W., R. B. Sanders, and A. C. Taft. Feral swine- are they a disease threat to livestock in the United States? Proceeding of the 10th Wildlife Damage Management Conference. Hot Springs, AR. April 6-9, 2003. Pages 316-325.

Wood, G. W. and R. H. Barrett. 1979. Status of wild pigs in the United States. Wildlife Society Bulletin 7:237-246.

Wood, G. W. and T. E. Lynn. 1977. Wild hogs in southern forests. South. J. Appl. For. 1:12-17.

Wood, G. W. and D. N. Roark. 1980. Food habits of feral hogs in coastal South Carolina. Journal of Wildlife Management 44:506-511.

Appendix A. Trap Plans

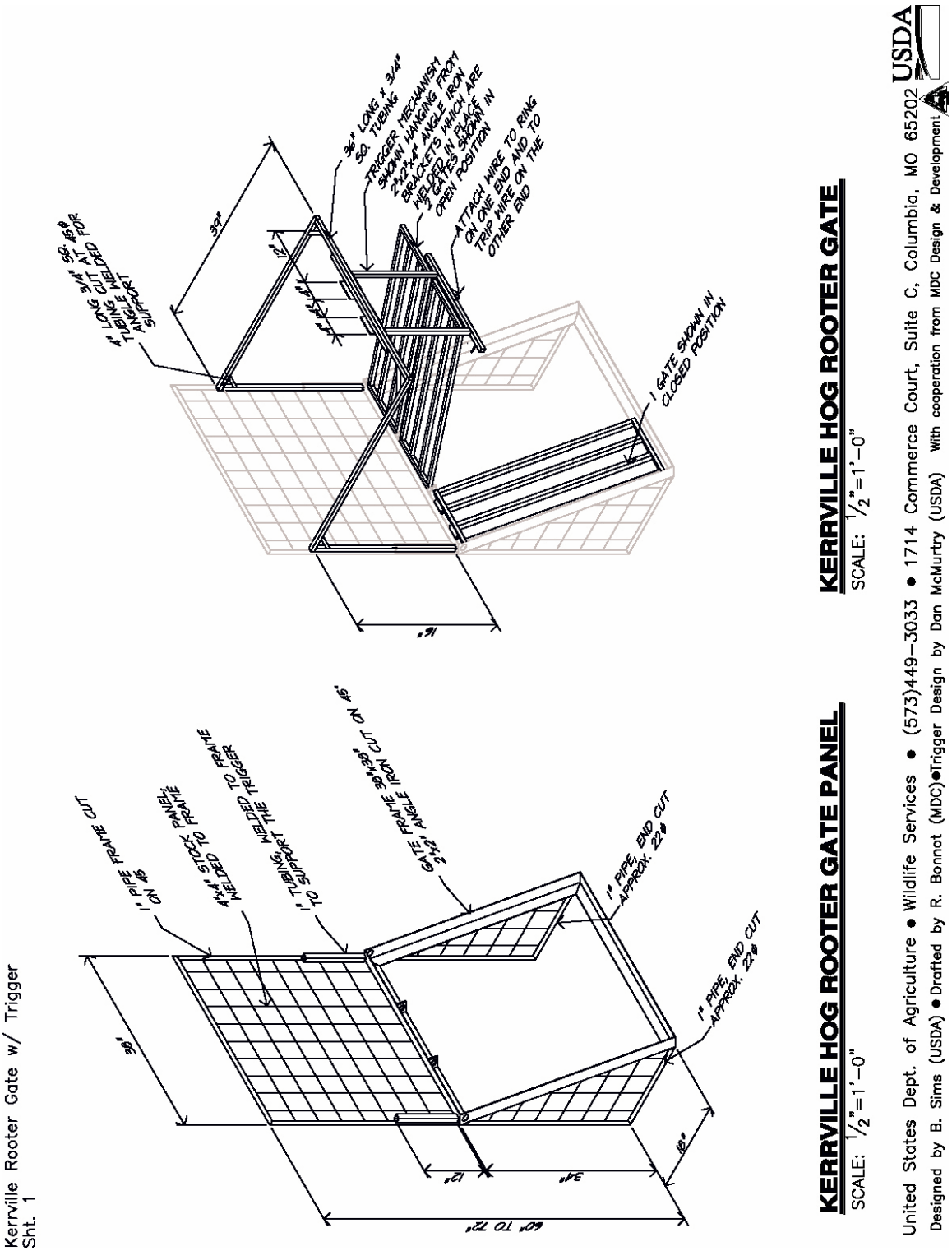

Kerrville Hog Rooter Gate w/ Trigger
Sht 2

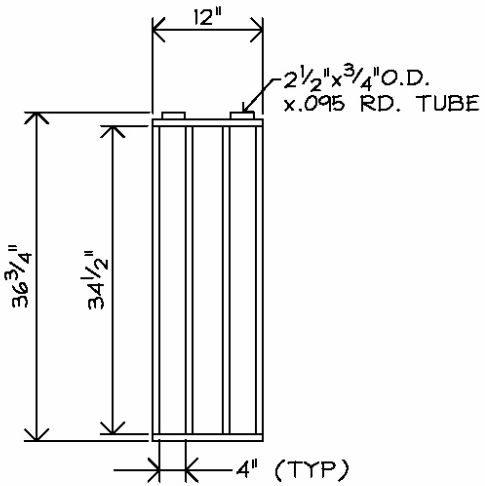

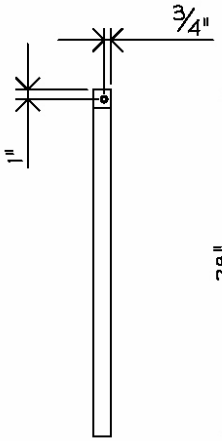

GATE DETAIL (TYPICAL OF 3)
SCALE: ¾"=1'-0"

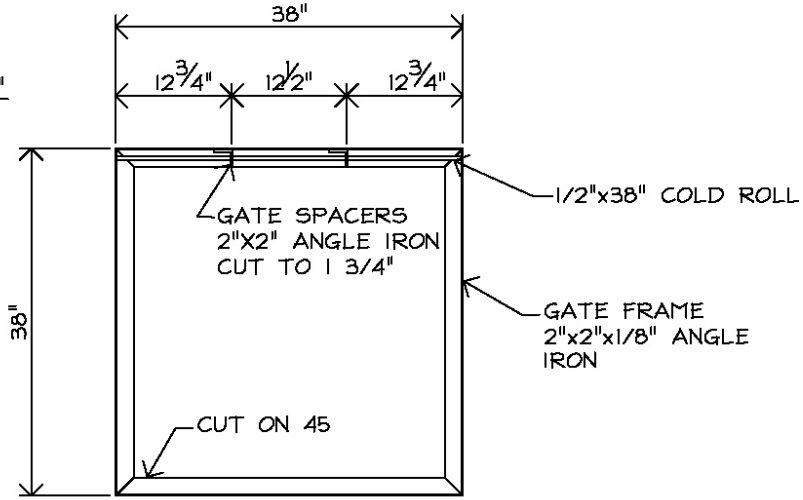

GATE FRAME DETAIL
SCALE: ¾"=1'-0"

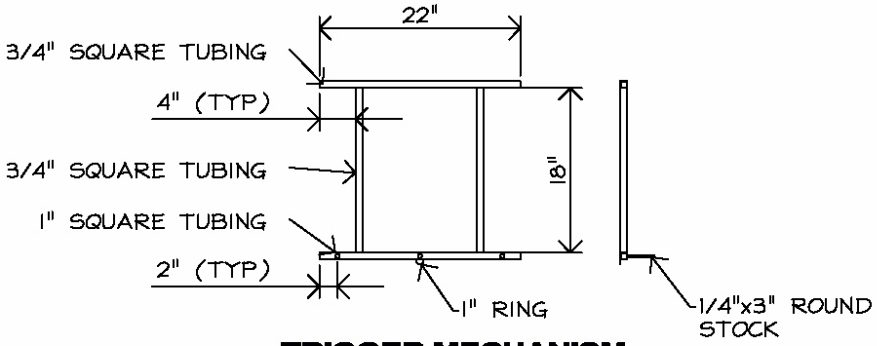

TRIGGER MECHANISM
SCALE: ¾"=1'-0"

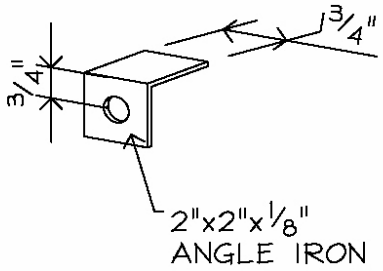

SPACER
SCALE: 3"=1'-0"

United States Dept. of Agriculture • Wildlife Services • (573)449-3033 • 1714 Commerce Court, Suite C, Columbia, MO 65202 USDA
Designed by B. Sims (USDA) • Drafted by R. Bonnot (MDC) • Trigger Design by Don McMurtry (USDA) With cooperation from MDC Design & Development

Kerrville Hog Rooter Gate w/ Trigger
Sht. 3

MATERIALS LIST:

GATE FRAME:
14' - 2"x2"x1/8" ANGLE IRON
38" - 1/2" COLD ROLL

GATE:
42'- 3/4"x3/4" 16 GAUGE Sq. TUBING
15"-3/4"OD x.095 ROUND TUBING

GATE PANEL:
21' - 1" SCH. 40 PIPE

TRIGGER MECHANISM:
20' - 3/4"x3/4" 16 GAUGE Sq. TUBING
33" - 1"x1" Sq. 14 GAUGE TUBING
9"- 1/4" ROUND STOCK
1 - 1" RING
8" 2x2 ANGLE IRON

OTHER SUPPLIES:
14.5 GAUGE WIRE, DOUBLED & TWISTED
10 - 6'-6" 'T' POSTS
3 - 4x4 WIRE PANELS 16' LONG x 5' MIN. HIGH

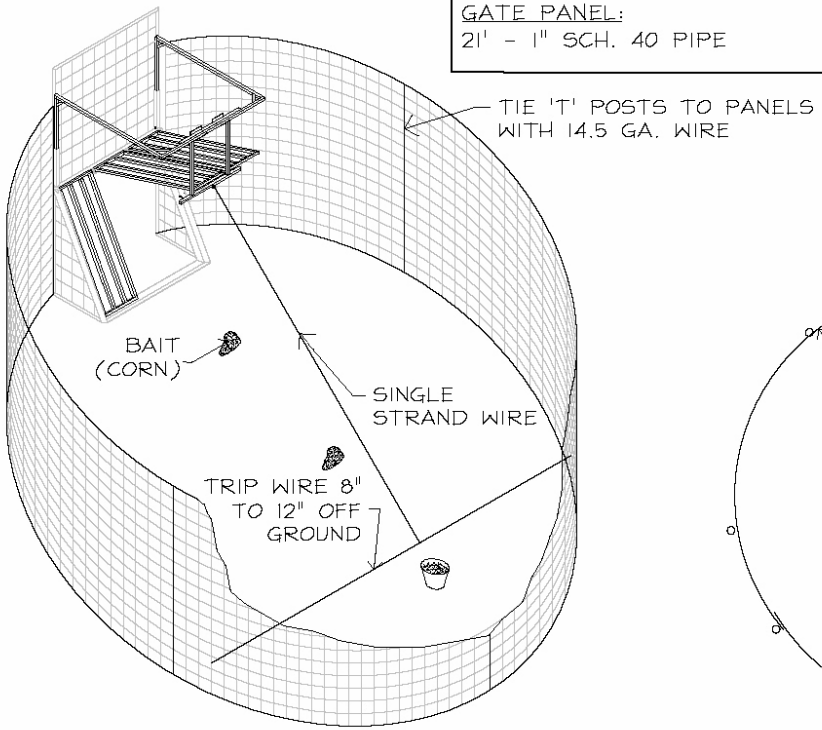

FENCE ISOMETRIC VIEW
NOT TO SCALE

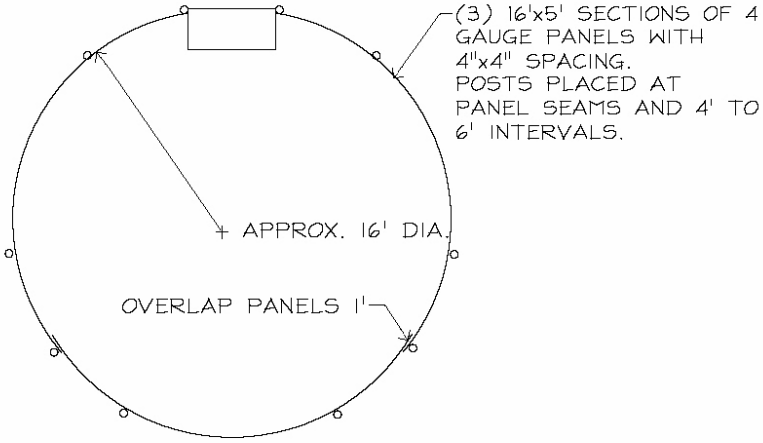

FENCE PLAN VIEW
SCALE: 3/16"=1'-0"

United States Dept. of Agriculture • Wildlife Services • (573)449-3033 • 1714 Commerce Court, Suite C, Columbia, MO 65202 USDA
Designed by B. Sims (USDA) • Drafted by R. Bonnot (MDC) • Trigger Design by Dan McMurtry (USDA) With cooperation from MDC Design & Development