D O N O T R E M O V E

September, 1975 - March, 1976
Laboratory Report
Gypsy Moth Methods Development Laboratory
Animal and Plant Health Inspection Service
United States Department of Agriculture
Otis Air Force Base
Massachusetts
02542

Animal and Plant Health Inspection Service

Charles P. Schwalbe	Laboratory Supervisor
Arthur P. Morris	Entomologist
Edward C. Paszek	Agriculturist
Larry L. Herbaugh	Agriculturist
Robert G. Reeves	Chemist
Othel T. Forrester	Entomologist
Leonard F. Kennedy	Supervisory Biological Technician
Winfred H. McLane	Biological Technician
Joseph G. R. Tardif	Biological Technician
John A. Tanner	Entomologist
Billy Kesler	Biological Technician
Curtis R. Stacy	Biological Technician
Rebecca Upton	Clerk-Stenographer
Joyce A. Finney	Biological Aid
Jesse J. Baker	Biological Aid
Judith Bonfield	Clerk-Typist
Robert N. Wassell	Maintenance Worker

Agricultural Research Service

Robert A. Bell	Research Leader
Charles D. Owens	Research Agricultural Engineer
Martin Shapiro	Research Entomologist

PESTICIDE TESTING SECTION

Project Number	Project Title	Report Type	Page
GM 5.1.2	Field Evaluation of Insecticides Against the Gypsy Moth	Final	6
GM 5.1.3	Laboratory Testing of Larval Repellents	Final	7
GM 5.1.5	Fumigation of Gypsy Moth Eggs with Methyl Bromide	Final	8
GM 5.1.9	Field Testing of Ground Applied Insecticides Against Gypsy Moth Larvae	Final	11
GM 6.1.1	Laboratory Screening of Candidate Pesticides Against the Gypsy Moth	Interim	19
GM 6.1.2	1976 Field Studies of Sevin-4-Oil, Dimilin, PP 557 and Sumithion	Interim	40
GM 6.1.3	Field Testing of Ground Applied Insecticides	Interim	42
GM 6.1.4	Evaluation of Pesticides for Browntail Moth	Interim	43
GM 6.1.5	Regulatory Treatments (Laboratory)	Interim	45

PHEROMONE, BEHAVIOR AND ECOLOGY SECTION

Project Number	Project Title	Report Type	Page
GM 5.2.1	Field Testing of Disparlure in Remote Infestations - Michigan	Final	48
GM 5.2.3	Field Testing of Disparlure in Remote Infestations - Virginia	Final	49
GM 5.2.5	Multiple Mating of Male Gypsy Moths	Final	50
GM 5.2.9	Mating Enhancement of Female Gypsy Moths with Small Amounts of Dispralure	Final	51
GM 5.2.16	Mating Inhibition by Microencapsulated Disparlure and Saturation Trapping at Different Population Densities	Final	53
GM 6.2.1	Comparative Attractancy of Synthetic and Natural Disparlure and Other Pheromonal Components	Final	60
GM 6.2.2	Responses of Male Gypsy Moths to Traps as Affected by the Rate of Pheromone Release	Interim	61
GM 6.2.3	Periodicity of Pheromone Release from Female Gypsy Moths	Interim	62
GM 6.2.5	Degree of Water Absorption in Trap Paper Samples	Final	63
GM 6.2.6	Comparative Study of Trap Adhesives	Interim	64
GM 6.2.7	Color Fading in Trap Paper Samples	Final	65

PHYSIOLOGY AND MASS REARING SECTION

Project Number	Project Title	Report Type	Page
GM 5.3.4	Effect of the Number of Egg Masses per Storage Container on the Hatchability of Eggs	Final	66
GM 5.3.6	Comparison of Different Egg Storage Techniques on the Hatchability of Eggs	Final	68
GM 5.3.8	Effect of Relative Humidity on Hatch Rate	Final	69
GM 5.3.9	Effect of Chilling Duration on Egg Hatchability	Final	70
GM 5.3.10	Hatch Rates of Laboratory Produced Eggs as Affected by Duration of Refrigeration	Final	71
GM 5.3.11	Effect on the Hatch Rate of Dehairing *L. dispar* Egg Masses Prior to Incubation	Final	73
GM 6.3.1	Hatch Rate of *L. dispar* Eggs as Affected by Precooling Storage Techniques	Interim	74
GM 6.3.2	The Hatch Rate of *L. dispar* Eggs as Affected by the Precooling Period and the Duration of the Embryonation Period	Interim	75
GM 6.3.3	The Hatch Rate of *L. dispar* Eggs as Affected by Treatment with Clorox® and Captan®	Interim	76
GM 6.3.4	Gypsy Moth Mass Rearing: Evaluation of Method for Surface Sterilization of Eggs and/or Pupae	Interim	77

Project Number	Project Title	Report Type	Page
GM 6.3.5	Mass Rearing: Evaluation and Development of More Economical Diets and More Efficient Techniques for Rearing and Handling Larval Gypsy Moths	Preliminary	79
GM 6.3.6	Establishment of Standards for Monitoring Colony Performance and Quality of Mass Reared Gypsy Moths	Preliminary	82
GM 6.3.7	Monitoring for Pathogens and Adventitious Microbes Associated with Gypsy Moth Rearing and Development of Effective Sanitation Procedures	Interim	83
GM 6.3.8	Development of Methods for Avoiding Contact with Insect Scales and Urticating Hairs Associated with the Adults, Eggs and Larvae of the Gypsy Moth	Interim	85

APPENDICES

	Title	Page
Appendix 1.	1975 Field Evaluation of Candidate Insecticides for Gypsy Moth Control	86
Appendix 2.	Degree of Water Absorption in Trap Paper Samples	102
Appendix 3.	Cooperative Agreement No. 12-16-4-167, The Pennsylvania State University, Chemical Residue Analysis in Ecosystems Sprayed in Communication Disruption Experiments with Disparlure, Progress Report, First Quarter	106
Appendix 4.	Cooperative Agreement No. 12-16-4-167, The Pennsylvania State University, Chemical Residue Analysis in Ecosystems Sprayed in Communication Disruption Experiments with Disparlure, Progress Report, Second Quarter	111
Appendix 5.	Cooperative Agreement No. 12-16-4-179, The Pennsylvania Agricultural Experiment Station, Behavior of the Adult Gypsy Moth: Its Use in Quantifying Populations, Quarterly Report 1976 No. 2	113

Project Number: GM 5.1.2
Project Title: Field Evaluation of Insecticides Against the Gypsy Moth
Report Period: September 1, 1975 - March 31, 1976
Report Type: Final
Project Leaders: Larry L. Herbaugh, W. H. McLane, C. R. Stacy, J. A. Finney

Appendix 1 is a special report detailing methods, materials, results and conclusions of the 1975 insecticide field evaluation program.

This manuscript has been submitted for publication in the APHIS-81 series.

Project Number: GM 5.1.3
Project Title: Laboratory Testing of Larval Repellents
Report Period: September 1, 1975 - March 31, 1976
Report Type: Final
Project Leader: Arthur P. Morris

Unavoidable circumstances prohibited preparation of a final report on this project. Because none of the large number of materials screened have demonstrated significant repellent activity, this project has been terminated. It is felt that useful regulatory treatments will more likely be developed through evaluation of hormone analogs, residual contact insecticides and ovicides. These tests are presently underway.

Project Number: GM 5.1.5
Project Title: Fumigation of Gypsy Moth Eggs with Methyl Bromide
Report Period: September 1, 1975 - March 31, 1976
Report Type: Final
Project Leaders: Curtis R. Stacy, L. L. Herbaugh

No work was performed on the fumigation schedule of gypsy moth eggs during this reporting period. However, effort was spent in designing and constructing a methyl bromide dispensing container (see Fig. 1.).

A difficulty often encountered while fumigating in the field is the cold temperatures that keep the fumigant from volatilizing out of the container to the commodity. This problem often leads to expensive, volatilizing equipment in the form of electricity, combustible engines or physically moving the commodity to a heat source.

This container was developed to use with 1 1/2 lb cans of MB. It is designed so that the only other piece of equipment needed to achieve volatilization will be a small portable propane torch.

The following steps can be used.

1. Insert 1 1/2 lb can of MB inside the dispenser.
2. Tightly secure lid of dispenser.
3. Secure lead (C) to fumigation area.
4. Heat dispenser with torch to desirable temperature (take inside reading on top gauge B).
5. Puncture can by turning piercing valve (A).
6. Wait approximately 4 minutes and repeat process.

This dispenser increases the safety aspect by eliminating any leakage and possibility of cans exploding when warming to a volatilizing temperature.

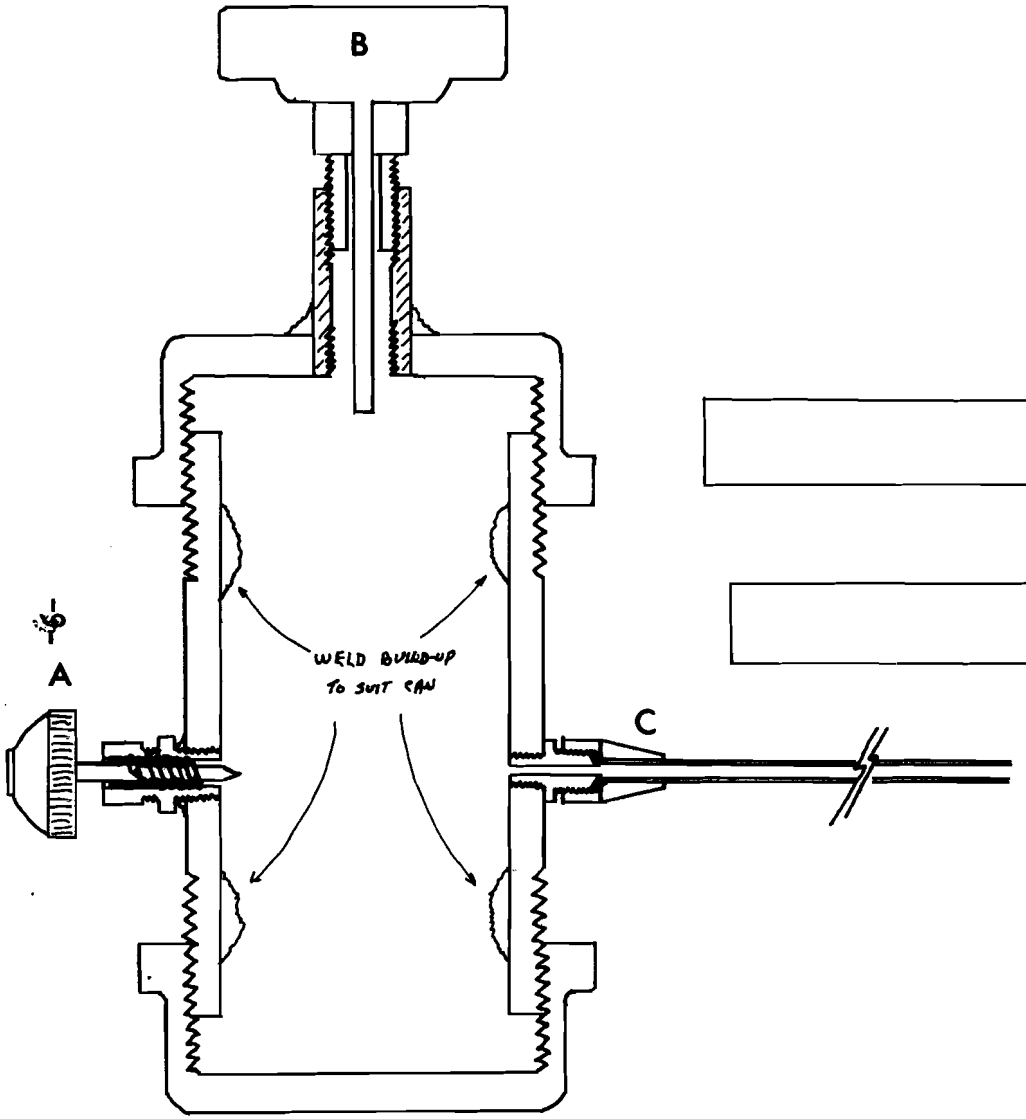

SIDE CUT-AWAY

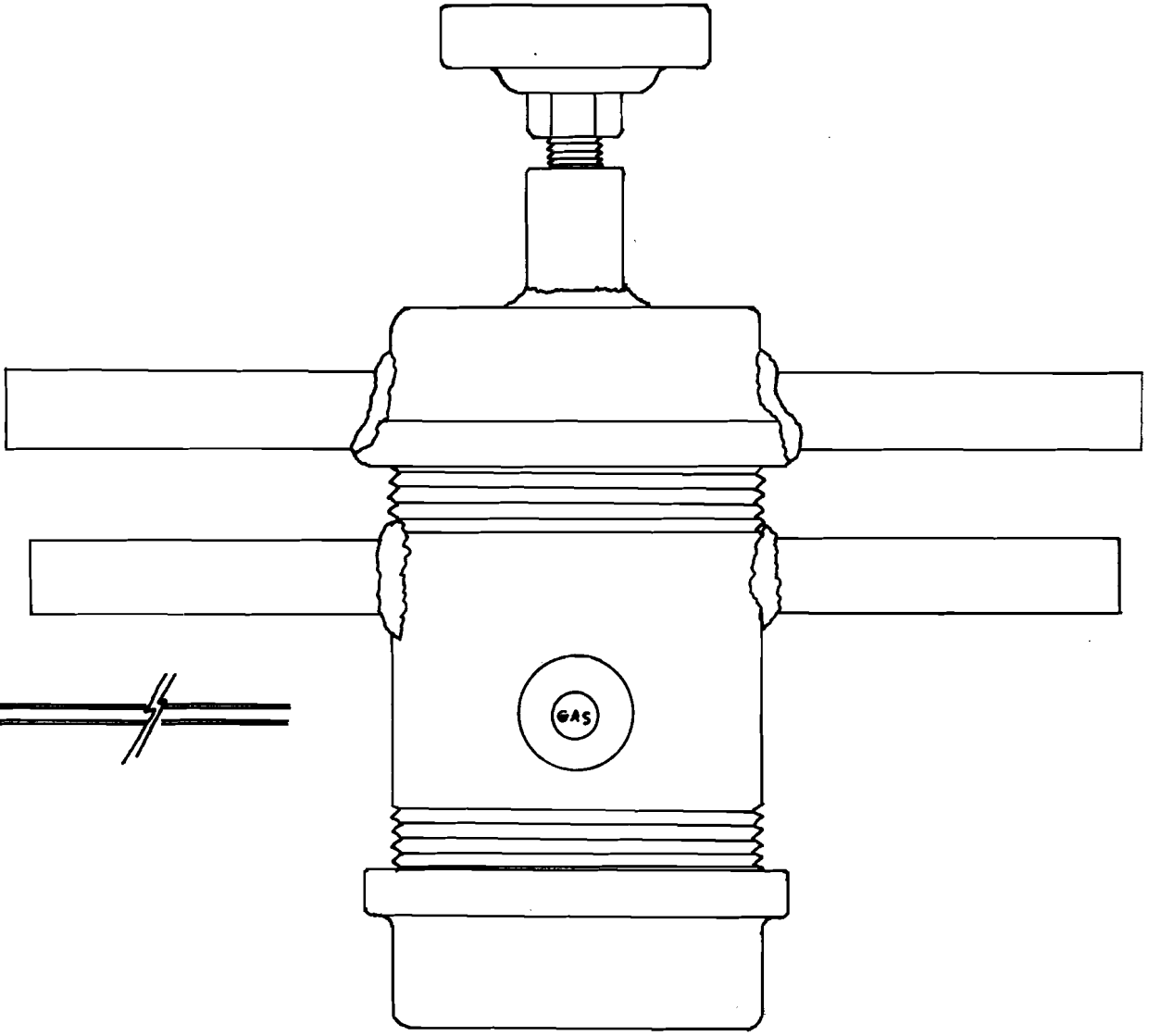

FRONT

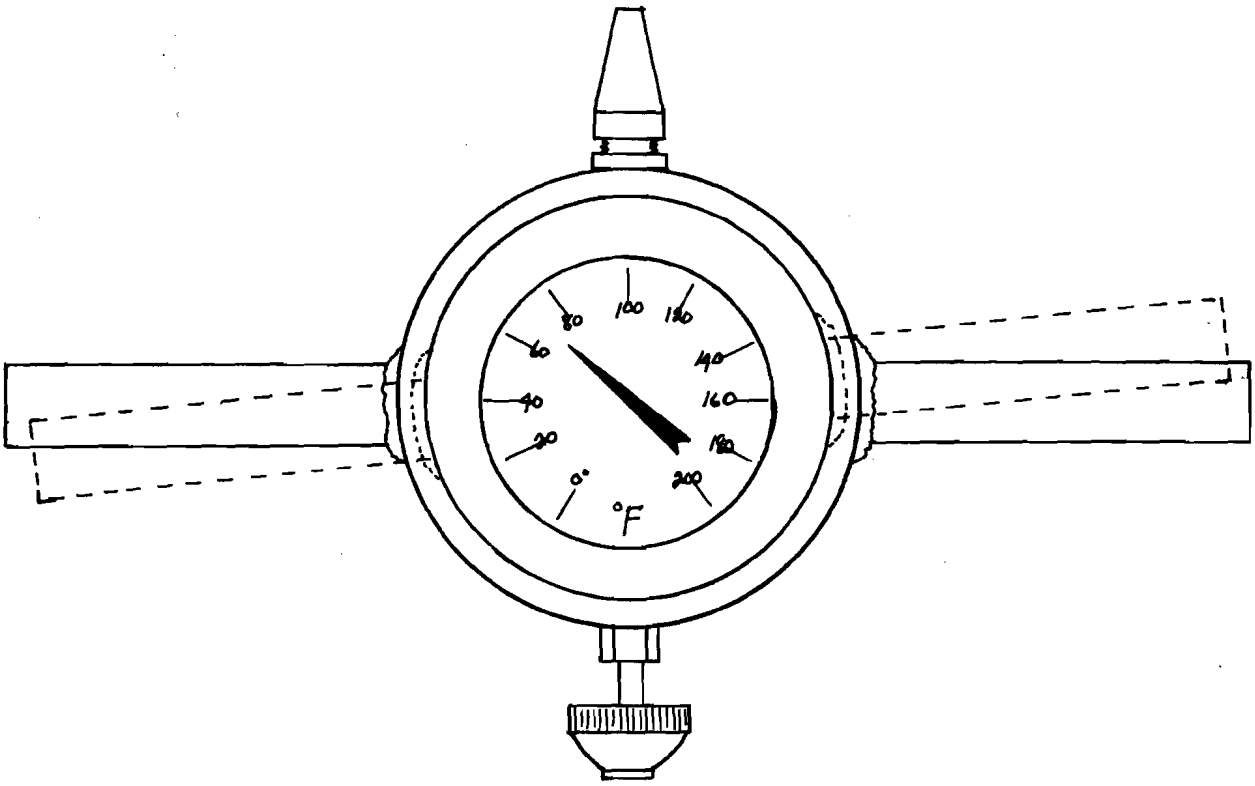

TOP VIEW

Project Number: GM 5.1.9
Project Title: Field Testing of Ground Applied Insecticides Against Gypsy Moth Larvae
Report Period: September, 1975 - March, 1976
Report Type: Final
Project Leaders: Larry L. Herbaugh, W. H. McLane, C. R. Stacy, J. A. Finney

Abstract: Eight chemical insecticides (ABG-6010, Encapsulated Diazinon, Encapsulated Resmethrin, Encapsulated Sumithion, FMC-33297, MC-9087, SBP-1513 and Sevin 80S) each were tested against gypsy moth larvae in mixed hardwood forest using a mist blower. Only FMC-33297, SBP-1513 and Sevin 80S gave consistent egg mass reduction per acre and foliage protection.

Introduction: During the summer of 1975, several chemicals were selected for additional studies under field conditions after undergoing extensive laboratory screening. In addition to several unregistered materials, Sevin 80S also underwent studies to see if lower dosages would be feasible to support future registration petitions.

Plot Establishment: Forty five one-acre plots were established in the Bald Eagle State Forest lands in Clinton County, Pennsylvania. These plots were located in an area that represented heavily wooded simulated campgrounds containing a measureable population of gypsy moth eggs.

These plots were designed so that they were 200 feet square with a small woods road dividing them. Within each one-acre plot, two subplots or sampling units were established, each comprised of a 33 foot square or 1/40 acre and placed on each side of the road. These 1/40 acre sampling units were used for all evaluations throughout the project.

Application: The application schedule was designed so that the materials were applied when the majority of the gypsy moth larvae were in the 2nd instar.

Only a small quantity of materials were needed for application. Because of this, materials were mixed on site using conventional mixing equipment and a "nurse" tank for a water supply. All mixing and spraying equipment was thoroughly cleaned between treatments to avoid any adulteration.

The materials were applied with a John Bean Mist Blower mounted on a 1 1/2 ton 4-wheel drive truck.

Evaluation: Each treatment was evaluated from the standpoint of egg mass/acre reduction, percent defoliation and larval mortality collected in dropcloths (see Table 1).

In early spring, egg masses were counted in each subplot to determine the number of egg masses/acre before treatment. After foliage drop, egg masses were again counted in each subplot to determine the number of post-treatment egg masses/acre. These data were used to calculate the population reduction.

Foliage protection was estimated by visual examination of the degree of defoliation in all sampling subplots just prior to treatment and again at the termination of larval feeding. In all cases the degree of defoliation prior to treatment was negligible or less than 1%. All visual examinations were made by the same crew to keep human error consistent.

To determine residual effects on larval mortality, a 3' x 3' white dropcloth was placed under a representative preferred host tree in each of the sampling units. Daily readings were made through 72 hours with a final reading made at 288 hours.

Conclusion: All materials were applied without any delays or mechanical problems during the project. Insect development, foliage expansion and weather were ideal during treatment and were taken into consideration while making the following conclusions.

ABG-6010 at .25 lb ai/5 gal/A showed only one plot with an egg mass reduction; all others showed a substantial increase. Foliage protection was not achieved as it compared equally to the checks. It also gave poor larval mortality. This material will need to be examined in depth before future testing can be justified.

Encapsulated Diazinon at 1.0 lb ai/5 gal/A was very similar to ABG-6010 in that there was generally an increase in egg masses/acre, poor foliage protection, and low larval mortality. Future testing cannot be justified at present time.

Encapsulated Resmethrin at 0.125 lb ai/5 gal/A gave no egg mass reduction but did show a good degree of foliage protection and some larval mortality. Future testing is questionable at this time.

Encapsulated Sumithion at 1.0 lb ai/5 gal/A gave no egg mass reduction, some foliage protection and a higher larval mortality than the previous materials. Future testing is very questionable at this time.

FMC 33297 at 0.060 lb ai/5 gal/A and at 0.010 lb ai/5 gal/A both gave a high percent reduction on egg masses/acre, a high degree of foliage protection and a high larval mortality reading. This material will be considered for future testing in 1976.

MC 9087 at 0.5 lb ai/5 gal/A showed excellent egg mass reduction, a good degree of foliage protection and a small rate of larval mortality. This material is under consideration for future testing.

SBP 1513 at all three dosages of 0.25, 0.125 and 0.060 lb ai/5 gal/A gave nearly 100% egg mass reduction. It also gave excellent foliage protection as well as a high larval mortality in the two higher dosages.

Sevin 80S was tested at 1.0, 2.0, 3.5, and 5.0 lb ai/5 gal/A to determine which dosage would give optimum results. A high degree of foliage protection was achieved in all treatments as well as a high mortality count. However, based on data collected in Table I, if a maximum egg mass density reduction/acre is desirable along with larval mortality and foliage protection, a mixture of 3.5 lb ai/5 gal H_2O/A is recommended.

Table I. 1975 Field Test Results - Mist Blower

Treatment	Plot No.	Sub-plot No.	Pre-spray em/A	Post-spray em/A	% Change in em/A	% De-foliation	Dropcloth Mortality 2hr	Dropcloth Mortality 288hr
ABG-6010	1	1	200	400	+200		4	4
(.25 lb ai/5g/A)		2	160	0	-100		-	-
	9	1	160	440	+275		6	6
		2	200	1560	+780		-	-
	30	1	60	600	+1000		2	2
		2	220	360	+163		4	4
Treatment Average			167	560	+335	17	3.5	3.5
Encap. Diazinon	2	1	1360	80	-94		5	7
(1.0 lb ai/5g/A)		2	240	3400	+1307		-	-
	11	1	160	200	+125		6	9
		2	200	160	-20		-	-
	31	1	40	680	+1700		2	3
		2	280	1520	+542		0	2
Treatment Average			327	1153	+352	8	3.3	5.3
Encap. Resmethrin	3	1	160	40	-75		19	19
(0.125 lb ai/5g/A)		2	280	1240	+442		-	-
	12	1	440	240	-50		1	1
		2	880	1320	+150		-	-
	32	1	160	2840	+1775		24	26
		2	40	1240	+310		0	0
Treatment Average			327	1153	+352	8	11	11.5
Encap. Sumithion	4	1	40	40	0		8	10
(1.0 lb ai/g/A)		2	280	1160	+414		-	-
	13	1	120	300	+250		1	3
		2	360	1120	+311		-	-
	33	1	200	2520	+1260		13	14
		2	40	1120	+2800		33	33
Treatment Average			173	1043	+602	9	14	15

1975 Field Test Results - Mist Blower, continued

Treatment	Plot No.	Sub-plot No.	Pre-spray em/A	Post-spray em/A	% Change in em/A	% Defoliation	Dropcloth Mortality 72hr	Dropcloth Mortality 288hr
FMC 33297	5	1	320	40	-88		37	37
(0.060 lb ai/5g/A)		2	560	0	-100		-	-
	14	1	80	0	-100		63	63
		2	520	0	-100		-	-
	34	1	240	80	-67		12	14
		2	40	40	0		26	26
Treatment Average			293	27	-91	7	35	35
FMC 33297	6	1	200	160	-20		31	31
(.010 lb ai/5g/A)		2	120	0	-100		-	-
	15	1	840	80	-91		29	30
		2	320	40	-88		-	-
	35	1	60	30	-50		1	3
		2	160	160	0		-	-
Treatment Average			283	78	-73	8	20	21
MC 9087	7	1	80	0	-100		5	7
(0.5 lb ai/5g/A)		2	160	0	-100		15	20
	16	1	160	0	-100		9	10
		2	200	120	-40		-	-
	36	1	840	0	-100		10	10
		2	240	80	-67		-	-
Treatment Average			313	33	-90	8	10	12
SBP 1513	8	1	760	0	-100		-	0
(0.25 lb ai/5g/A)		2	120	0	-100		-	-
	17	1	160	0	-100		38	39
		2	200	0	-100		-	-
	37	1	1160	0	-100		29	29
		2	260	0	-100		-	-
Treatment Average			443	0	-100	7	34	34

1975 Field Test Results - Mist Blower, continued

Treatment	Plot No.	Sub-plot No.	Pre-spray em/A	Post-spray em/A	% Change in em/A	% Defoliation	Dropcloth Mortality 72hr	Dropcloth Mortality 288hr
SBP 1513	19	1	120	0	-100		19	19
(0.125 lb ai/5g/A)		2	160	0	-100		-	-
	18	1	160	0	-100		41	41
		2	120	0	-100		-	-
	38	1	480	0	-100		34	41
		2	240	0	-100		-	-
Treatment Average			213	0	-100	7	31	31
SBP 1513	20	1	80	0	-100		16	16
(0.060 lb ai/5g/A)		2	240	0	-100		-	-
	27	1	160	40	-75		8	8
		2	80	0	-100		4	5
	44	1	240	0	-100		0	2
		2	520	0	-100		-	-
Treatment Average			220	6.6	-99	7	7	8
Sevin 80S	24	1	120	40	-67		1	1
(1.0 lb ai/5g/A)		2	160	80	-50		8	11
	26	1	520	160	-70		28	28
		2	280	560	+200		13	15
	29	1	80	40	-50		7	10
		2	200	200	0		7	15
Treatment Average			226	180	-21	7	11	13
Sevin 80S	22	1	200	0	-100		10	10
(2.0 lb ai/5g/A)		2	400	80	-80		36	38
	39	1	300	120	-60		23	24
		2	220	600	+290		26	27
	43	1	440	0	-100		36	36
		2	400	720	+180		17	17
Treatment Average			327	253	-23	8	24	25

1975 Field Test Results - Mist Blower, continued

Treatment	Plot No.	Sub-plot No.	Pre-spray em/A	Post-spray em/A	% Change in em/A	% Defoliation	Dropcloth Mortality 72hr	Dropcloth Mortality 288hr
Sevin 80S (3.5 lb ai/5g/A)	23	1	120	0	-100		1	1
		2	80	0	-100		18	18
	25	1	280	0	-100		13	13
		2	80	0	-100		2	3
	42	1	560	0	-100		56	57
		2	460	0	-100		14	17
Treatment Average			263	0	-100	7	17	18
Sevin 80S (5.0 lb ai/5g/A)	21	1	200	0	-100		32	32
		2	200	40	-80		7	9
	41	1	560	0	-100		22	25
		2	120	0	-100		17	18
	45	1	240	0	-100		9	11
		2	80	0	-100		18	18
Treatment Average			233	7	-97	7	18	19
Control	10	1	400	1280	+320		3	3
		2	120	320	+266		-	-
	28	1	120	1200	+1000		0	0
		2	120	1560	+1300		0	0
	40	1	410	80	-81		7	7
		2	250	400	+160		1	1
Control Average			236	806	+341	17	1.8	1.8

Mention of a proprietary product in this publication does not constitute a guarantee or warranty of the product by the U. S. Department of Agriculture, nor imply its approval by the Department to the exclusion of other products that may also be suitable.

Project Number: GM 6.1.1
Project Title: Laboratory Screening of Candidate Pesticides Against the Gypsy Moth
Report Period: September 1, 1975 - March 31, 1976
Report Type: Interim
Project Leaders: Winfred H. McLane, Joyce A. Finney

The main objective of this laboratory screening project is to collect mortality data on experimental compounds potentially useful against the gypsy moth, evaluating the data and selecting suitable materials for field testing.

The following materials were tested against gypsy moth larvae using the oak seedling test technique.

Material	Company	Dosage	Instar	Weather	Aging	% Mortality	Days After Treatment
ABG-6070	Abbott	1.25 lb/gal/A	II			100	2
		0.62 lb/gal/A	"			99	3
		0.31 lb/gal/A	"			92	3
		0.15 lb/gal/A	"			81	3
		0.07 lb/gal/A	"			60	3
		0.03 lb/gal/A	"			62	3
		0.01 lb/gal/A	"			30	3
		0.009 lb/gal/A	"			11	3
		0.004 lb/gal/A	"			1	3
		Check	"			0	3
		.31 lb/gal/A	"	1"		45	5
		.15 lb/gal/A	"	1"		10	5
		.07 lb/gal/A	"	1"		13	5
		1.25 lb/gal/A	"		9	100	2
		0.62 lb/gal/A	"		9	60	2

Material	Company	Dosage	In-star	Weather	Days Aging	% Mor-tality	Days After Treat-ment
ABG-6070 (EC)	Abbott	0.31 lb/gal/A	II		9	58	2
		0.15 lb/gal/A	"		9	20	2
		0.07 lb/gal/A	"		9	20	2
		Check	"		9	0	2
Decis (EC)	Procida	0.13 lb/gal/A	"			98	4
		0.006 lb/gal/A	"			96	4
		0.003 lb/gal/A	"			90	4
		0.001 lb/gal/A	"			72	4
		0.0007 lb/gal/A	"			71	4
		Check	"			1	4
		0.003 lb/gal/A	"		31	13	2
		0.001 lb/gal/A	"		31	6	2
		Check	"		31	0	2
Dimilin (SULV)	Thompson-Hayward	0.208 lb/gal/A	"			95	6
		"	"	1"		86	6
		0.104 lb/gal/A	"			100	6
		"	"	1"		91	6
		0.052 lb/gal/A	"			90	6
		"	"	1"		91	6
		0.026 lb/gal/A	"			91	6
		"	"	1"		82	6

Material	Company	Dosage	In-star	Weather	Days Aging	% Mor-tality	Days After Treat-ment
Dimilin (SULV)	Thompson-Hayward	0.013 lb/gal/A	"			83	6
		"	"	1"		79	6
		Check	"			0	6
		0.06 lb/20 oz/A	"	1"		98	8
		"		2"		98	8
		"		3"		87	8
		0.03 lb/10 oz/A	"	1"		95	8
		"	"	2"		83	8
		"	"	3"		86	8
Dimilin (25 wp)	Thompson-Hayward	0.06 lb/gal/A	II	1" NO STICKER		98	10
		"	"	1" 3% CHEVRON STICKER ADDED		95	10
		"	"	2" NO STICKER		95	10
		"	"	2" 3% CHEVRON STICKER ADDED		85	10
		"	"	3" NO STICKER		90	8
		"	"	3" 3% CHEVRON STICKER ADDED		90	8
		"	"	4" NO STICKER		100	14
		"	"	4" 3% CHEVRON STICKER ADDED		100	14

Material	Company	Dosage	In-star	Weather	Days Aging	% Mor-tality	Days After Treat ment
Dimilin (25 wp)	Thompson-Hayward	0.06 lb/gal/A	II		5" NO STICKER	98	14
		"	"		5" 3% CHEVRON STICKER ADDED	100	14
		0.03 lb/gal/A	II		1" NO STICKER	93	10
		"	"		1" 3% CHEVRON STICKER ADDED	99	10
		"	II		2" NO STICKER	82	10
		"	"		2" 3% CHEVRON STICKER ADDED	85	10
		"	II		3" NO STICKER	82	8
		"	"		3" 3% CHEVRON STICKER ADDED	86	8
		"	"		4" NO STICKER	100	14
		"	"		4" 3% CHEVRON STICKER ADDED	100	14
		"	"		5" NO STICKER	98	14
		"	"		5" 3% CHEVRON STICKER ADDED	98	14
		0.01 lb/gal/A	II		1" NO STICKER	99	10
		"	"		1" 3% CHEVRON STICKER ADDED	98	10

Material	Company	Dosage	In-star	Weather	Days Aging	% Mor-tality	Days After Treat-ment
Dimilin (25 wp)	Thompson-Hayward	0.01 lb/gal/A	II	2" NO STICKER		81	9
		"	"	2" 3% CHEVRON STICKER ADDED		96	9
		"	"	3" NO STICKER		84	8
		"	"	3" 3% CHEVRON STICKER ADDED		82	8
		"	"	4" NO STICKER		100	14
		"	"	4" 3% CHEVRON STICKER ADDED		100	14
		"	"	5" NO STICKER		97	14
		"	"	5" 3% CHEVRON STICKER ADDED		100	14
Orthene (2S)	Chevron	0.003 lb/gal/soln.	II	Soil around plants treated with 50 ml of lb/gal/soln. as indicated		100	4
		0.001 lb/gal/soln.	"	"		100	4
		0.00078 lb/ "	"	"		100	4
		0.00039 lb/ "	"	"		100	4
		Check	"			0	4
Orthene (75S)	Chevron	0.0156 lb/gal/A	II			99	6
		0.0078 lb/gal/A	II			96	6
		0.0039 lb/gal/A	II			18	6

Material	Company	Dosage	In-star	Weather	Days Aging	% Mor-tality	Days After Treat-ment
PP 557 (2 EC)	ICI	0.25 lb/gal/A	II	3"	43	99	8
		0.125 lb/gal/A	"	"	43	99	8
		0.06 lb/gal/A	"	"	43	98	8
		0.03 lb/gal/A	"	"	43	97	8
		Check	"	"	43	0	8
		0.06 lb/gal/A	"	NO SUNLIGHT		100	2
		"	"	EXPOSED TO 6 HRS NATURAL SUNLIGHT		99	2
		"	"	12.5 HRS ARTIFI-CIAL SUNLIGHT		100	7
		"	"	26 HRS ARTIFICIAL SUNLIGHT		100	4
		0.03 lb/gal/A	"	NO SUNLIGHT		98	2
		"	"	EXPOSED TO 6 HRS NATURAL SUNLIGHT		96	2
		"	"	12.5 HRS ARTIFI-CIAL SUNLIGHT		100	7
		"	"	26 HRS ARTIFICIAL SUNLIGHT		99	4
		0.01 lb/gal/A	"	NO SUNLIGHT		85	2
		"	"	6 HRS EXPOSURE TO NATURAL SUNLIGHT		98	2
		"	"	12.5 HRS OF ARTI-FICIAL SUNLIGHT		100	7
		"	"	26 HRS ARTIFICIAL SUNLIGHT		100	4
RH-218 (EC)	ROHM and HAAS	1.25 lb/gal/A	"			100	2
		0.625 lb/gal/A	"			100	4

Material	Compnay	Dosage	In-star	Weather	Days Aging	% Mor-tality	Days After Treat-ment
RH-218 (EC)	Rohm and Haas	0.312 lb/gal/A	II			100	4
		0.156 lb/gal/A	"			100	4
		0.075 lb/gal/A	"			100	4
		0.037 lb/gal/A	"			97	3
		0.018 lb/gal/A	"			86	3
		0.009 lb/gal/A	"			96	6
		0.004 lb/gal/A	"			78	6
		Check	"			0	6
RH-0308 (EC)	"	1 lb/gal/A	"			92	2
		0.5 lb/gal/A	"			88	2
		0.25 lb/gal/A	"			64	2
		0.12 lb/gal/A	"			65	2
		0.06 lb/gal/A	"			39	2
		Check	"			1	2
SAN-197 (EC)	Sandoz-Wander	1.07 lb/gal/A	"			100	3
		0.53 lb/gal/A	"			98	3
		0.26 lb/gal/A	"			98	3
SAN-279 (EC)	Sandoz-Wander	1.07 lb/gal/A	"			100	3
		0.53 lb/gal/A	"			99	3
		0.26 lb/gal/A	"			96	3
		Check	"			0	3

Material	Company	Dosage	In-star	Weather	Days Aging	% Mor-tality	Days After Treat-ment
SD-41706 (EC)	Shell	1.2 lb/gal/A	II			100	2
		"	"		17	100	1
		0.6 lb/gal/A	"			100	3
		"	"		17	100	3
		0.3 lb/gal/A	"			100	3
		"	"		17	100	2
		0.1 lb/gal/A	"			99	3
		"	"		17	95	3
		0.07 lb/gal/A	"			95	3
		"	"		17	75	3
		Check	"			0	3
		0.07 lb/gal/A	"	1"		36	3
		"	"	1" 3% CHEVRON STICKER ADDED		60	3
		"	"	1" 3% CHEVRON STICKER ADDED		90	5
		0.037 lb/gal/A	"	1"		17	3
		"	"	1" 3% CHEVRON STICKER ADDED		46	3
		"	"	1" 3% CHEVRON STICKER ADDED		83	5
		0.018 lb/gal/A	"	1"		2	3
		"	"	1" 3% CHEVRON STICKER ADDED		18	3

Material	Company	Dosage	In-star	Weather	Days Aging	% Mor-tality	Days After Treat-ment
SD-41706 (EC)	Shell	0.018 lb/gal/A	II	1" 3% CHEVRON STICKER ADDED		28	5
		0.009 lb/gal/A	"	1"		0	3
		"	"	1" 3% CHEVRON STICKER ADDED		18	3
		"	"	1" 3% CHEVRON STICKER ADDED		28	5
		Check	"			0	5
Sumithion (40 wp)	Stauffer	1 lb/gal/A	"			100	3
		"	"	1"		24	5
		0.5 lb/gal/A	"			100	3
		"	"	1"		4	5
		0.25 lb/gal/A	"			77	3
		"	"	1"		1	5
		0.125 lb/gal/A	"			52	3
		"	"	1"		0	5
		0.06 lb/gal/A	"			28	3
		"	"	1"		0	5
Sumithion (8 EC)	"	1 lb/gal/A	"			100	3
		"	"	1"		15	5
		"	"	1" 3% CHEVRON STICKER ADDED		60	7

Material	Company	Dosage	In-star	Weather	Days Aging	% Mor-tality	Days After Treat ment
Sumithion (8 EC)	Stauffer	1 lb/gal/A	II	2" 3% CHEVRON STICKER ADDED		33	6
		"	"	1" 6% CHEVRON STICKER ADDED		28	5
		"	"			100	3
		"	"	1" 3% PINOLENE STICKER ADDED		7	3
		"	"	1" 6% PINOLENE STICKER ADDED		48	3
		"	"	1" 3% RHOPLEX STICKER ADDED		100	3
		"	"	1" 6% RHOPLEX STICKER ADDED		98	3
		0.5 lb/gal/A	"			100	3
		"	"	1"		1	5
		"	"	1" 3% CHEVRON STICKER ADDED		17	7
		"	"	2" 3% CHEVRON STICKER ADDED		17	5
		"	"	1" 6% CHEVRON STICKER ADDED		19	5
		0.25 lb/gal/A	"			100	7
		"	"	1"		0	3
		"	"	1" 3% CHEVRON STICKER ADDED		61	7

Material	Company	Dosage	In-star	Weather	Days Aging	% Mor-tality	Days After Treat-ment
Sumithion	Stauffer	0.25 lb/gal/A	II	2" 3% CHEVRON STICKER ADDED		29	6
		"	"	1" 6% CHEVRON STICKER ADDED		38	5
		0.12 lb/gal/A	II			97	7
		"	"	1"		0	5
		"	"	1" 3% CHEVRON STICKER ADDED		49	7
		"	"	2" 3% CHEVRON STICKER ADDED		11	6
		"	"	1" 6% CHEVRON STICKER ADDED		11	5
		0.06 lb/gal/A	"			96	7
		"	"	1"		0	5
		"	"	1" 3% CHEVRON STICKER ADDED		27	7
		"	"	2" 3% CHEVRON STICKER ADDED		26	6
		"	"	1" 6% CHEVRON STICKER ADDED		28	5
		0.03 lb/gal/A	"			29	6
		0.01 lb/gal/A	"			9	6
		Check	"			0	7

Material	Company	Dosage	In-star	Weather	Days Aging	% Mor-tality	Days After Treat-ment
Sumithion (8 EC)	Stauffer	1 lb/gal/Soln.	II	LARVAE SPRAYED DIRECTLY THEN EXPOSED TO ARTI-FICIAL DIET		96	1
TH-6042 (2 FL)	Thompson-Hayward	0.06 lb/gal/A	"			100	16
		0.03 lb/gal/A	"			100	16
		0.015 lb/gal/A	"			100	16
		0.007 lb/gal/A	"			100	16
		0.003 lb/gal/A	"			100	16
		Check	"			0	16
WL-43775	Shell	1.2 lb/gal/A	"			100	3
		"	"		17	100	2
		0.6 lb/gal/A	"			100	3
		"	"		17	100	2
		0.3 lb/gal/A	"			100	3
		"	"		17	100	3
		0.1 lb/gal/A	"			100	3
		"	"		17	99	3
		0.07 lb/gal/A	"			100	3
		"	"		17	97	3
		Check	"			0	3
		0.07 lb/gal/A	"	1"		92	6
		"	"	1" 3% CHEVRON STICKER ADDED		100	3

Material	Company	Dosage	In-star	Weather	Days Aging	% Mor-tality	Days After Treat-ment
WL-43775	Shell	0.03 lb/gal/A	II	1"		57	6
		"	"	1" 3% CHEVRON STICKER ADDED		96	4
		0.01 lb/gal/A	"	1"		38	6
		"	"	1" 3% CHEVRON STICKER ADDED		80	4
		0.009 lb/gal/A	"	1"		22	6
		"	"	1" 3% CHEVRON STICKER ADDED		58	4

A test was conducted with the growth regulator RO-10-3108 from HLR Sciences:

Test Insects Used: Laboratory reared 4th instar gypsy moth larvae. Larvae were reared on artificial diet up until time of test. One hundred larvae were exposed to RO-10-3108 treatment and 100 were used as a control.

Treatment Used: Northern red oak seedlings were sprayed in a laboratory spray chamber. Ten plants were treated and then 10 larvae were introduced onto the treated foliage of each plant. Ten untreated plants acted as controls.

Dosage and Rate Applied: Test material was applied to the foliage at 0.5 lb ai/gal/A.

Formulation Used: RO-10-3108, 50% EC - (ACR 2019E). Sample was received by Otis September 26, 1975.

Holding Chamber: After treatment and larval introduction, plants were held at 26.67°C with a relative humidity of 60%.

Results: As 4th instar gypsy moth larvae consume large amounts of foliage daily, it was necessary to feed larvae daily. New foliage, when introduced to the treatment, was newly sprayed with RO-10-3108 at 0.5 lb ai/gal/A. New control plants were not treated. At the time of feeding,

mortality readings were made and general observations were made and recorded.

After a 2 week exposure to treated foliage, a substantial decrease in feeding occurred and larvae started to look sick. At the same time, control larvae continued to feed well. From this point until the test was terminated, treatment plants were changed about every 2-3 days. Controls continued to be changed daily. Treatment insects had new sprayed foliage a total of 25 times with controls having new foliage a total of 43 times.

Throughout the test, larval mortality occurred in both treated and controls. This was due to virus, cannibalism and effects of RO-10-3108. The end result was the development of 14 healthy pupae in the controls and no pupal development from the 100 larvae exposed to RO-10-3108 at 0.5 lb ai/gal/A. This would indicate that, in the laboratory, pupal development can be impeded, resulting in excellent control of the gypsy moth. However, large amounts of treated foliage had to be consumed to achieve this. It is questionable if this amount would be available under field conditions. Work should now continue to determine the precise dosage and exposure needed to achieve adequate control. When this is obtained, we will then be able to tell where the material might fit into the overall gypsy moth program.

Material	Dosage	No. Test Insects	Instar	% Pupae Recovered
RO-10-3108	0.5 lb ai/gal/A	100	4th	0
Control	"	100	4th	14

During this reporting period much time has been spent working with a new Sevin-4-Oil formulation. Mr. J. Henderson, pilot, Beltsville, MD, found that with the assistance of select emulsifiers, he was able to dilute Sevin-4-oil with water. We have worked with Mr. Henderson on this and have developed a formulation that will be tested in the field during 1976. If workable in the field, the formulation could save substantial amounts of money in the gypsy moth program. It might also be adapted to a number of other programs.

A total of 16 emulsifiers were tested:

Sponto AK16-95	Target E	Triton X-180	Triton CS-7
Sponto H44C	Folicole	Triton X-190	Triton 1956
Sponto 6525	Adser 775	Triton X-301	Foamwet
Sponto 207	Triton X-100	Triton X-305	Top Job

Of this group, Triton X-190, Sponto AK16-95 and Sponto H44C appeared to be the most promising. A material labelled Triton X-300 was also tested. However, when Rohm and Haas were asked about the material, they said they had no record showing they ever produced the material.

The Sevin-4-Oil was cut to 2 lb ai/gal/sol. by using 2 percent of emulsifier and 50 percent water. The following tests were then conducted.

Material: Sevin-4-Oil

Emulsifier	Dosage	Weather	Instar	% Mortality	Days After Treatment
Kerosene	1 lb/40 oz/A		II	100	3
Triton X-300	1 lb/.5 gal/A		"	100	3
Sponto H44C	1 lb/.5 gal/A		"	100	3
Triton X-190	1 lb/.5 gal/A		"	97	4
Kerosene	1 lb/40 oz/A	Aged 17 Days	"	93	2
Triton X-300	1 lb/.5 gal/A	"	"	80	2
AK16-95	1 lb/.5 gal/A		"	100	3
Kerosene	1 lb/40 oz/A	Material Heated to 80°C	"	100	3
"	"	Material Cooled to 0°C	"	98	3
Triton X-190	0.5 lb/qt/A	Material Heated to 80°C	"	100	3
"	"	Material Cooled to 0°C	"	99	3
Sponto H44C	"	Material Heated to 80°C	"	100	3
"	"	Material Cooled to 0°C	"	99	3

Material: Sevin-4-Oil

Emulsifier	Dosage	Weather	Instar	% Mortality	Days After Treatment
Sponto H44C	0.5 lb/qt/A		II	99	4
	0.25 lb/pt/A		"	90	4
Triton X-190	0.5 lb/qt/A		"	100	3
	0.25 lb/pt/A		"	93	4
	Check		"	0	4
Kerosene	0.5 lb/20 oz/A		"	100	3
	0.25 lb/pt/A		"	98	4
Triton X-300	0.5 lb/qt/A		"	100	3
	0.25 lb/pt/A		"	99	4
Kerosene	1 lb/40 oz/A	Aged 17 days	"	93	2
	0.5 lb/20 oz/A	"	"	88	2
Triton X-300	1 lb/.5 gal/A	"	"	88	2
	0.5 lb/qt/A	"	"	83	2
AK16-95	1 lb/.5 gal/A	"	"	100	3
	"	1"	"	100	3
	"	2"	"	100	3
	0.5 lb/qt/A		"	100	3
	"	1"	"	100	3
	"	2"	"	98	3
Kerosene	1 lb/40 oz/A	1"	"	99	3

Material: Sevin-4-Oil

Emulsifier	Dosage	Weather	Instar	% Mortality	Days After Treatment
Kerosene	0.5 lb/20 oz/A	1"	II	99	3
	0.25 lb/10 oz/A	1"	"	89	3
Triton X-300	1 lb/.5 gal/A	1"	"	99	3
	0.5 lb/qt/A	1"	"	96	3
	0.25 lb/pt/A	1"	"	90	3
Sponto H44C	1 lb/.5 gal/A	1"	"	98	3
	0.5 lb/qt/A	1"	"	99	3
	0.25 lb/pt/A	1"	"	90	3
Triton X-190	1 lb/.5 gal/A	1"	"	97	3
	0.5 lb/qt/A	1"	"	95	3
	0.25 lb/pt/A	1"	"	79	3
Kerosene	1 lb/40 oz/A	1" Heated to 80°C	"	99	3
	"	1" Cooled to 0°C	"	98	3
Triton X-190	0.5 lb/qt/A	1" Heated to 80°C	"	99	3
	"	1" Cooled to 0°C	"	93	3
Sponto H44C	"	1" Heated to 80°C	"	100	3
	"	1" Cooled to 0°C	"	100	3
Kerosene	1 lb/40 oz/A	2"	"	99	3
	0.5 lb/20 oz/A	2"	"	96	3
	0.25 lb/10 oz/A	2"	"	99	3

Material: Sevin-4-Oil

Emulsifier	Dosage	Weather	Instar	% Mortality	Days Aft Treatme
Triton X-300	1 lb/.5 gal/A	2"	II	100	3
	0.5 lb/qt/A	2"	"	99	3
	0.25 lb/pt/A	2"	"	89	3
Triton X-190	1 lb/.5 gal/A	2"	"	98	4
	0.5 lb/qt/A	2"	"	99	4
	0.25 lb/pt/A	2"	"	77	4
Sponto H44C	1 lb/.5 gal/A	2"	"	99	4
	0.5 lb/qt/A	2"	"	99	4
	0.25 lb/pt/A	2"	"	95	4
Kerosene	1 lb/40 oz/A	2" Heated to 80°C	"	100	3
	"	2" Cooled to 0°C	"	96	3
Triton X-190	0.5 lb/qt/A	2" Heated to 80°C	"	95	3
	"	2" Cooled to 0°C	"	98	3
Sponto H44C	0.5 lb/qt/A	2" Heated to 80°C	"	97	3
	"	2" Cooled to 0°C	"	89	3
Triton X-190	0.5 lb/gal/A		"	97	3
	0.25 lb/.5gal/A		"	93	3
	0.12 lb/qt/A		"	95	3
	0.5 lb/gal/A	1"	"	90	3
	0.25 lb/.5 gal/A	1"	"	58	3
	0.12 lb/qt/A	1"	"	12	3

Approximately 145 gallons of northern red oak acorns were collected and stored in cold storage. Five gallons were sent to Dr. Forgash of Rutgers for use in insecticide and parasite work. Northern New England personnel also collected acorns for the Otis laboratory.

Very limited work was started with spray droplet size in the laboratory. It consisted mainly of reviewing literature.

A small group of Apanteles melanocelus and Exorista larvarum were received at the screening laboratory.

A total of 35 insecticide samples and 5 emulsifiers were received for laboratory tests.

The insecticide spray chamber was calibrated using gas chromatography.

Sample No.	Treatment (Malathion) lb/A	Analytical Results lb/A	Average	Range
B-0.068-I	0.068	0.072	0.076	0.067-0.083
II	"	0.067		
III	"	0.083		
IV	"	0.081		
V	"	0.076		
B-0.13-I	0.13	0.091	0.088	0.072-0.101
II	"	0.093		
III	"	0.081		
IV	"	0.101		
V	"	0.072		
B-0.27-I	0.027	0.024	0.021	0.196-0.24
II	"	0.204		
III	"	0.204		
IV	"	0.196		
V	"	0.196		
B-0.55-I	0.55	0.412	0.435	0.412-0.47
II	"	0.412		
III	"	0.44		
IV	"	0.44		
V	"	0.47		
B-1.1-I	1.1	0.85	0.89	0.821-0.98
II	"	0.821		
III	"	0.936		
IV	"	0.879		
V	"	0.98		

Sample No.	Treatment (Malathion) lb/A	Analytical Results lb/A	Average	Range
C-0.06-I	0.06	0.056	0.056	0.051-0.060
II	"	0.054		
III	"	0.051		
IV	"	0.057		
V	"	0.060		
C-0.13-I	0.13	0.101	0.101	0.091-0.11
II	"	0.091		
III	"	0.101		
IV	"	0.102		
V	"	0.11		
C-0.27-I	0.27	0.34	0.37	0.34-0.41
II	"	0.034		
III	"	0.041		
IV	"	0.041		
V	"	0.036		
C-0.55-I	0.55	0.55	0.55	0.52-0.58
II	"	0.58		
III	"	0.54		
IV	"	0.52		
V	"	0.55		
C-1.1-I	1.1	1.37	1.44	1.31-1.53
II	"	1.49		
III	"	1.53		
IV	"	1.49		
V	"	1.31		

Mr. McLane worked with District Director Mr. V. A. LaFleur in revising the APHIS regulatory manual.

Speeches

Mr. McLane gave a 1 hour talk on new developments in gypsy moth control to the Barnstable, Mass. Grubbers Club. A question and answer period followed the presentation.

Meetings

Mr. White, Mr. Holland and Mr. Reardon met at Otis with Mr. Herbaugh and

Mr. McLane to discuss 1976 insecticide laboratory and field work.

A regulatory meeting was held at Otis to discuss regulatory problems, mainly recreational vehicles and house trailers.

The Massachusetts Horticultural Congress, Boston, Mass.

Northeast Aerial Applicators Conference, Ithaca, NY.

Visitors

Mr. O. C. Zoebisch, DuPont
Mr. R. H. Sparnicht, Thompson-Hayward
Mr. R. P. Stollings, Thompson-Hayward
Mr. C. Byrd, Sandoz-Wander
Mr. R. Perry, FMC
Mr. R. Kelliher, Mass. Dept. of Natural Resources
Mr. Lister, Univ. of Massachusetts
Mr. R. D. Cannizzaro, Thompson-Hayward

Project Number: GM 6.1.2
Project Title: 1976 Field Studies of Sevin-4-Oil, Dimilin, PP 557 and Sumithion
Report Period: September 1, 1975 to March 31, 1976
Report Type: Interim
Project Leaders: Larry L. Herbaugh, W. H. McLane, C. R. Stacy, J. A. Finney

Thirty 50-acre plots have been selected in Clinton County, Pennsylvania to be sprayed by air to determine the efficacy of the following insecticide treatments for support of future registration petitions.

Material	Rate	Plots	Remarks
Sevin-4-Oil	1 lb ai/40 oz/A	3	Applied when foliage is 50-70% expanded and majority of target insects are 2nd instar (normal time). Rate includes 8 oz of fuel oil/acre.
Sevin-4-Oil	.5 lb ai/32 oz/A	3	Applied as above, but rate includes 2% emulsifier and water
Dimilin	.06 lb ai/gal/A	3	Applied when foliage is 20-30% expanded and majority of target insects are first instar.
Dimilin	.06 lb ai/gal/A	3	Applied at normal time.
Dimilin	.06 lb ai/1/2 gal/A	3	"
Dimilin-SULV 5%	.03 lb ai/9.6 oz/A	3	"
Dimilin-SULV 5%	.06 lb ai/19.2 oz/A	3	Applied at normal time.
PP 557	.06 lb ai/gal/A	3	Applied by conventional air equipment
PP 557	.01 lb ai/gal/A	3	"
Sumithion	.75 or 1.0 lb ai/gal/A	3	"
Untreated Plots		10	To be used as checks.

These plots are presently being established with the approval of local, state and federal agencies and the aid of USDA-FS personnel stationed at Mifflinburg, PA.

A report detailing procedures, data and conclusions will be forthcoming for this project.

Project Number: GM 6.1.3
Project Title: Field Testing of Ground Applied Insecticides
Report Period: September 1, 1975 - March 31, 1976
Report Type: Interim
Project Leaders: Larry L. Herbaugh, W. H. McLane, C. R. Stacy, J. A. Finney

An area in Clinton County, Pennsylvania has been selected to establish "simulated campgrounds" for testing chemicals with a roto mist blower mounted on a 1 1/2 ton truck.

These study areas are being established with the assistance of USDA-FS personnel stationed at Mifflinburg, PA.

The following chemicals will be applied when the majority of the target insects are in the second instar and the oak foliage is 75% expanded.

Material	Dosage	Sticker	Plots
Sevin 80S	3.5 lb ai/5 gal/A	3% Chevron sticker	3
"	2.0 lb ai/5 gal/A	"	3
"	1.0 lb ai/5 gal/A	"	3
Sevin-4-Oil	5 lb ai/5 gal/A	Emulsifier added	3
"	3.5 lb ai/5 gal/A	"	3
"	2.0 lb ai/5 gal/A	"	3
Orthene 75S	3.5 lb ai/5 gal/A	3% Chevron sticker	3
"	2.0 lb ai/5 gal/A	"	3
"	1.0 lb ai/5 gal/A	"	3
"	.05 lb ai/5 gal/A	"	3
Imidan 50wp	3.5 lb ai/5 gal/A	3% Chevron sticker	3
"	2.0 lb ai/5 gal/A	"	3
"	1.0 lb ai/5 gal/A	"	3
"	.0375 lb ai/5 gal/A	"	3
PP 557	0.06 lb ai/5 gal/A	None	3
"	0.01 lb ai/5 gal/A	None	3
NTN 9306	0.5 lb ai/5 gal/A	None	3
"	0.125 lb ai/5 gal/A	None	3
Untreated Checks			18

A report detailing procedures, data, and conclusions will be forthcoming for this project.

Project Number: GM 6.1.4
Project Title: Evaluation of Pesticides for Browntail Moth
Report Period: Sept. 1, 1975 - March 31, 1976
Report Type: Interim
Project Leaders: Winfred H. McLane, Joyce A. Finney

The primary objective of this project is to screen candidate materials against the Browntail moth.

As was reported in the last semiannual laboratory report, the entire detectable browntail moth infestation on Sandy Neck in the town of Barnstable, Massachusetts was treated with Sevin 80S. Foliage was treated to the point of runoff with a solution of 1.0 lb ai/5 gal of water. A small amount of Chevron spray sticker was also added to the formulation.

Scouting for winter webs continued in the treated area with a total of 18 being found to date. Ten of the webs were found in an area that was not treated with the remaining number found in the treated area. All webs except 6 were destroyed with the remaining to be destroyed.

There is still the possibility that some live webs are covered over with sand and are not detectable. It was hoped that the treated area could be trapped during adult flight, however, light traps were not available for use. It may be possible to trap the area this summer.

A number of Browntail moth egg masses were collected and held at 4.44°C and 60% relative humidity. After 3 months eggs were incubated at 26.67°C and 60% relative humidity. No hatch was realized after 1 month of incubation.

Sevin-4-oil and Dimilin were tested against Browntail larvae in the laboratory.

Table 1. Mortality of Browntail Moth Larvae Exposed to Treated Oak Seedlings

Material	Dosage	Instar	% Mortality	Days After Treatment
Sevin-4-oil	1 lb ai/40 oz/A	II	100	4
"	0.5 lb ai/20 oz/A	II	100	4
"	0.25 lb ai/10 oz/A	II	99	4
"	0.125 lb ai/5 oz/A	II	82	4
Control	-	II	0	4
Dimilin	0.06 lb ai/gal/A	II	97	11
"	0.06 lb ai/gal/A	IV	97	11
"	0.01 lb ai/gal/A	IV	64	11
Control	-	IV	0	11

After 3 days of exposure, larvae in Dimilin test were transfered to artificial diet. Plants were completely eaten at that time.

As of late, there has been talk of treating the total Browntail moth infestation with Sevin-4-oil in 1977. We have proposed that small pl›t work should be conducted first to collect efficacy data and establish proper treatment time.

Project Number: GM 6.1.5
Project Title: Regulatory Treatments (Laboratory)
Report Period: September 1, 1975 - March 31, 1976
Report Type: Interim
Project Leaders: Winfred H. McLane, L. L. Herbaugh, J. A. Finney, C. R. Stacy

The lack of effective treatment methods for recreational vehicles and mobile homes is a major deficiency in the APHIS Gypsy Moth regulatory program. Experimental laboratory and field tests are conducted to develop improved techniques for dealing with this type of regulatory problem.

Effective regulatory treatments for trailers and recreational vehicles must be directed toward larval and egg stages of the gypsy moth. Insecticides, detergents, waxes, solvents and fumigants each offer certain advantages for this type of use. Fumigation was eliminated from this stage of testing because of cost and logistical considerations. Seven chemical insecticides were selected for testing of residual properties (longevity). Egg masses were treated with a number of detergents and other materials to determine ovicidal properties .

Two hundred tar paper squares (6" x 6") each were treated with insecticide using a 0.5 lb ai/gal sol. Seven insecticides were tested with 1 set of tar paper used as a check. The papers were treated to the point of runoff. Half of the papers were aged outdoors, tacked under (4' x 8') sheets of masonite; half were held inside the laboratory. None were exposed to sunlight.

Ten newly hatched gypsy moth larvae were exposed to tar paper sheets at 10 day intervals for the first 100 days of aging following treatment. This was achieved by placing the paper in a cylindrical cardboard container with artificial diet. Mortality readings were made after 24 hours and 48 hours. After 80 days, DDT, Resmethrin, SBP-1513, FMC-33297, Phoxim and Monitor continued to give good control. Pyrenone gave poor control after 10 days of aging.

Egg masses (5 each) were treated with various detergents and other materials to evaluate ovicidal properties. The egg masses were field collected and treated with a small hand sprayer to the point of runoff. Eggs were held in an environmental chamber until hatch was complete.

Material	Aged	Hours Larvae Exposed to Material	% Mortality After Material Age 10 Days	40 Days	80 Days
DDT 50 w/p	Inside	24	90	100	100
	Inside	48	100	100	100
	Outside	24	96	100	98
	Outside	48	100	100	100
Resmethrin (EC)	Inside	24	86	90	74
	Inside	48	96	100	100
	Outside	24	68	22	22
	Outside	48	96	56	66
SBP-1513 (EC)	Inside	24	96	90	92
	Inside	48	98	100	100
	Outside	24	100	98	100
	Outside	48	100	100	100
FMC-33297 (EC)	Inside	24	98	98	86
	Inside	48	100	100	100
	Outside	24	98	98	88
	Outside	48	100	100	100
Phoxim (EC)	Inside	24	100	100	100
	Inside	48	100	100	100
	Outside	24	100	100	100
	Outside	48	100	100	100
Pyrenone (EC)	Inside	24	68	36	18
	Inside	48	82	78	78
	Outside	24	18	12	12
	Outside	48	50	42	82
Monitor (EC)	Inside	24	100	100	98
	Inside	48	100	100	100
	Outside	24	94	100	86
	Outside	48	100	100	100
Check	Inside	24	4	10	2
	Inside	48	10	24	40
	Outside	24	6	6	8
	Outside	48	6	18	68

Material Tested	Total Hatch in 5 Samples Treated	Check
Fire Extinguishing Agent (Light Water)		
10%	0	1,476
10%	0	112
5%	901	1,308
5%	1,164	1,861
Liquid Floor Wax		
100%	0	289
50%	1,406	1,637
50%	1,038	1,754
Top Job		
100%	4	1,858
50%	0	995
Wax Remover		
100%	36	763
50%	5	804
Pine Scent		
100%	0	1,209
50%	0	1,192
Wisk		
100%	991	1,006
Ammonia		
100%	479	777
Pink		
100%	1,104	1,126
Starch		
100%	289	843
Joy		
100%	1,068	640

Laboratory work is continuing with the most promising materials. Field studies are anticipated for the summer of 1976.

Project Number: GM 5.2.1
Project Title: Field Testing of Disparlure in Remote Infestations - Michigan
Report Period: September 1, 1975 - March 31, 1976
Report Type: Final
Project Leaders: C. P. Schwalbe, C. Stephens, B. Kesler

The previous Laboratory Report (January - September, 1975) detailed all control and methods activities conducted in Michigan since 1973. Based upon 3 seasons' experience in this area, it was determined that population density is insufficient to accurately judge treatment effectiveness. Therefore, this program was discontinued. Continued investigations into trap efficiency, disparlure efficacy, and formulation evaluation will be conducted in areas of higher population density in cooperation with ARS and FS scientists.

Project Number: GM 5.2.3
Project Title: Field Testing of Disparlure in Remote Infestations - Virginia
Report Period: September 1, 1975 - March 31, 1976
Report Type: Final
Project Leaders: Charles P. Schwalbe, A. P. Morris

Recovery of 80-90% of over 11,000 commercial delta traps distributed over ca 16 mi^2 near Dayton, VA resulted in identification of only one male gypsy moth. Needless to say, this result was unexpected and surprising in view of the consistent capture of moths in the area since 1972. State/Federal survey programs will be reimplemented in 1976. As in Michigan, evaluation of eradication treatments will be conducted in areas with population densities adequate to determine effectiveness.

Project Number: GM 5.2.5
Project Title: Multiple Mating of Male Gypsy Moths
Report Period: September 1, 1975 - March 31, 1976
Report Type: Final
Project Leaders: Edward C. Paszek, J. A. Tanner, L. F. Kennedy

Multiple mating of 35 single male NJF_{11} gypsy moths with 2 to 8 females resulted in 166 matings. The resulting egg masses along with 5 single mating controls were embryonated for 30 days (75°F, 60% RH, 14D: 10N), refrigerated in plastic bags at 40°F for 180 days and removed for determination of hatch (Table No. 1).

Table No. 1. Multiple Mating of Male Gypsy Moths NJF_{11}.

No. ♂♂	No. Times Mated	% ♀♀ Depositing Egg Mass	% Masses Fertilized	% Masses Hatched	% Eggs Embryonated	% Total of Eggs Hatched	% of Embryonated Eggs Hatched
1	8 (8♀♀)	100.0	100.0	87.5	67.7	47.1	60.8
5	7 (35♀♀)	94.2	80.0	56.5	48.2	24.9	36.4
7	6 (42♀♀)	100.0	64.2	47.5	43.0	25.3	34.0
5	5 (25♀♀)	96.0	72.3	47.0	49.9	24.0	28.0
8	4 (32♀♀)	100.0	68.7	46.8	40.0	12.6	18.6
6	3 (18♀♀)	100.0	44.4	38.8	29.2	14.9	18.4
3	2 (6♀♀)	100.0	66.6	33.3	33.5	25.6	29.1
35♂♂	166♀♀	98.6	70.8	51.0	44.5	24.9	32.1
Controls: single matings							
5	1 (5♀♀)	100.0	100.0	80.0	57.3	49.1	60.5

A high percentage, 98.6%, of the 166 ♀♀ deposited egg masses. Approximately 3/4, 72% of these masses were fertilized and 1/2, 51%, hatched. 45% of the eggs embryonated and 32% of the embryonated eggs hatched. All of the 5 single mated control ♀♀ deposited fertile masses of which 80% hatched. 57% of these masses were embryonated and 60% of the embryonated eggs hatched. Laboratory reared male gypsy moths can mate with up to 8 ♀♀. However, the resulting percentage of embryonated eggs hatched was 50% less than the control

Project Number: GM 5.2.9
Project Title: Mating Enhancement of Female Gypsy Moths with Small Amounts of Disparlure
Report Period: September 1, 1975 - March 31, 1976
Report Type: Final
Project Leaders: Edward C. Paszek, J. A. Tanner, L. F. Kennedy

Mating enhancement of laboratory-reared female moths treated with small amounts of disparlure was determined. Treated and untreated moths were compared in their ability to attract males, length of time in copulation and fertility of resultant egg masses.

A total of 120 NJF_{11} female gypsy moths of age groups 0, 24, 48, 72, 96 and 120 hours were tested. Five, 2.5, and 1 ug of disparlure was applied to the mesothoracic wings. Pairs were allowed to mate on 2' stakes located in a 14' x 14' x 7.5' bioassay chamber (23°C, 60% RH, 14L:10D), containing free flying male moths. A similar number of untreated females was used as a control. Data taken were time elapsed before mating and duration of copulation. Egg masses were embryonated in the chamber for 30 days, seated in plastic bags and refrigerated (4°C) for 175 days followed by incubation for hatch at 22°C, 90-95% RH, and a 14L:10D photoperiod.

Table 1. Mating Enhancement of Female Gypsy Moths Treated with Small Amounts of Disparlure.

Treatment	No. of ♀♀	♀♀ Age Hrs	% ♀♀ Depositing Eggs	Time Elapsed Before Mating Min.	Period of Copulation Min.	% Eggs Embryonated	% Total Hatch	% Hatch Embryonated Eggs
5 ug Disparlure	6	0	100	60	183	91.9	75.8	83.4
	6	24	100	10	163	82.5	53.7	58.4
	6	48	100	23	145	77.5	59.1	62.1
	6	72	100	35	150	76.4	52.1	76.4
	6	96	100	11	102	79.0	68.0	71.4
	30		100	27	148	81.4	61.7	70.3
Control	5	0	83	287	145	77.3	71.3	73.9
	5	23	83	245	123	94.2	82.8	92.6
	5	48	83	278	108	91.5	52.7	56.1
	3	72	50	57	65	79.8	65.7	71.5
	5	96	83	78	67	67.4	51.3	53.2
	23		76.4	189	101	82.0	64.7	69.4

Table 1. continued

Treatment	No. of ♀♀	♀♀ Age Hrs	% ♀♀ Depos-iting Eggs	Time Elapsed Before Mating Min.	Period of Copu-lation Min.	% Eggs Embry-onated	% Total Hatch	% Hatch Embry-onated Eggs
2.5 ug Disparlure	6	0	100	25	209	51.4	44.[illegible]	45.2
	12	24	83	11	140	68.6	47.9	52.5
	6	48	100	14	178	74.2	49.1	55.0
	11	72	90	30	145	63.8	39.8	45.5
	6	96	100	7	169	84.1	66.4	73.1
	6	120	83	20	154	58.6	48.5	66.0
	47		92.6	17.8	165.8	66.7	49.4	56.2
Control	6	0	100	90	201	93.7	61.3	64.2
	12	24	83	156	125	75.7	46.1	51.3
	6	48	100	988	100	56.6	35.8	40.4
	11	72	90	234	238	85.7	50.0	55.8
	6	96	83	375	195	82.5	62.1	72.5
	6	120	50	225	202	60.1	48.7	53.0
	44		84.3	344.6	176.8	75.7	50.6	56.2
1 ug Dis-parlure	6	0	100	22	220	92.6	37.8	84.9
	6	24	66	135	182	95.6	83.0	87.0
	6	48	100	279	310	74.6	44.1	46.3
	6	72	100	15	225	82.5	69.7	73.8
	6	96	100	10	185	56.6	29.2	31.8
	11	120	100	37	211	87.2	66.2	74.7
	41		94.3	83.0	222.1	81.5	55.	66.4
Control	6	0	83	255	167	86.1	78.5	90.6
	6	24	100	245	182	85.3	73.7	85.6
	6	48	66	75	255	44.8	31.0	37.1
	6	72	100	240	168	92.9	75.9	80.6
	6	96	66	291	210	67.1	50.1	67.3
	11	120	100	238	170	64.0	33.3	35.6
	41		85.8	224	192	73.3	57.	66.1

A higher percentage of treated moths deposited egg masses than the untreate controls (Table 1.). The period before mating was considerably longer in the untreated controls. There was no significant difference between the hatching percentages, the total number of eggs deposited or the total number of embryonated eggs.

Project Number: GM 5.2.16
Project Title: Mating Inhibition by Microencapsulated Disparlure and Saturation Trapping at Different Population Densities
Report Period: September 1, 1975 - March 31, 1976
Report Type: Final
Project Leaders: Othel T. Forrester, E. C. Paszek, C. P. Schwalbe

This series of tests was conducted to determine the population density of gypsy moth at which mating disruption by microencapsulated disparlure can be effected. Mating reduction by high density trapping was also tested. Twenty-two plots, each 40 acres square were established in naturally infested areas of varying population densities.

Population densities were determined by pre-season egg mass counts in 5 1/10 acre subplots in each plot. For purposes of discussion, 128-604 egg masses/acre, 12-62 egg masses/acre, and less than 11 egg masses /acre are considered heavy, moderate and light population, respectively.

Monitor females were placed on trees just outside of each subplot; 10/plot or 2/subplot. Two baffles around each tree, 18" apart and 3 feet above the ground, with a back flap placed between the, facilitated female moth recovery; 62.32% of the moths placed were recovered.

Two delta traps were placed at the midpoint between the subplots. One trap was 25 feet above the ground, the second was 3 feet above the ground. An aerial application of disparlure at 8 g/acre was applied to 3 plots of each population density on July 3, 1975. The 1975 microencapsulated formulation prepared by NCR was used.

Three plots were treated with 9 commercial delta traps/acre, baited with Hercon® dispensers.

Marked, laboratory reared female moths were placed in and recovered from the treated and control plots at three day intervals. Matings were determined by the presence of sperm in the bursa copulatrix and spermatheca. Egg masses laid by the marked female moths were also collected and checked for embryonation.

Observations were terminated in the high and medium infestation plots on July 27, 1975 because mating in the treated and control plots were nearly equal.

The results of these tests are illustrated in Figures 1-5. Details of egg mass survey, numbers of moths placed, recovered, etc. are on pp 98-99, January-August 1975 Laboratory Report.

The incidence of mating of virgin females was significantly reduced ($p=.01$) in plots with preseason egg mass counts of less than 10 egg

masses/A by treatment with 8 g disparlure/A and hand placement of delta traps (9 traps/A). Reduction mediated by microcapsule application was ca. 90%; that caused by intensive trapping was ca. 50% (Figures 1-3). Aerial treatment of plots with preseason egg mass counts greater than 12 egg masses/A consistantly failed to result in mating suppression (Figures 4-5). In every case, postseason egg mass counts were greater than those preseason.

These data confirm early theory that mating disruption by broadcast application of disparlure is effective only at very sparse population densities. In fact, it is somewhat surprising that disruption was not observed in areas containing as few as 12 egg masses/A. Insufficient survey in those plots sparsely infested prohibits drawing any relationships between reduced levels of mating and changes in egg mass density. It is important to note that peak mating in treated plots correlates closely with peak mating in controls. Apparently, "pressure" exerted by males at peak flight in very low level populations is sufficient to result in limited mating of virgin females.

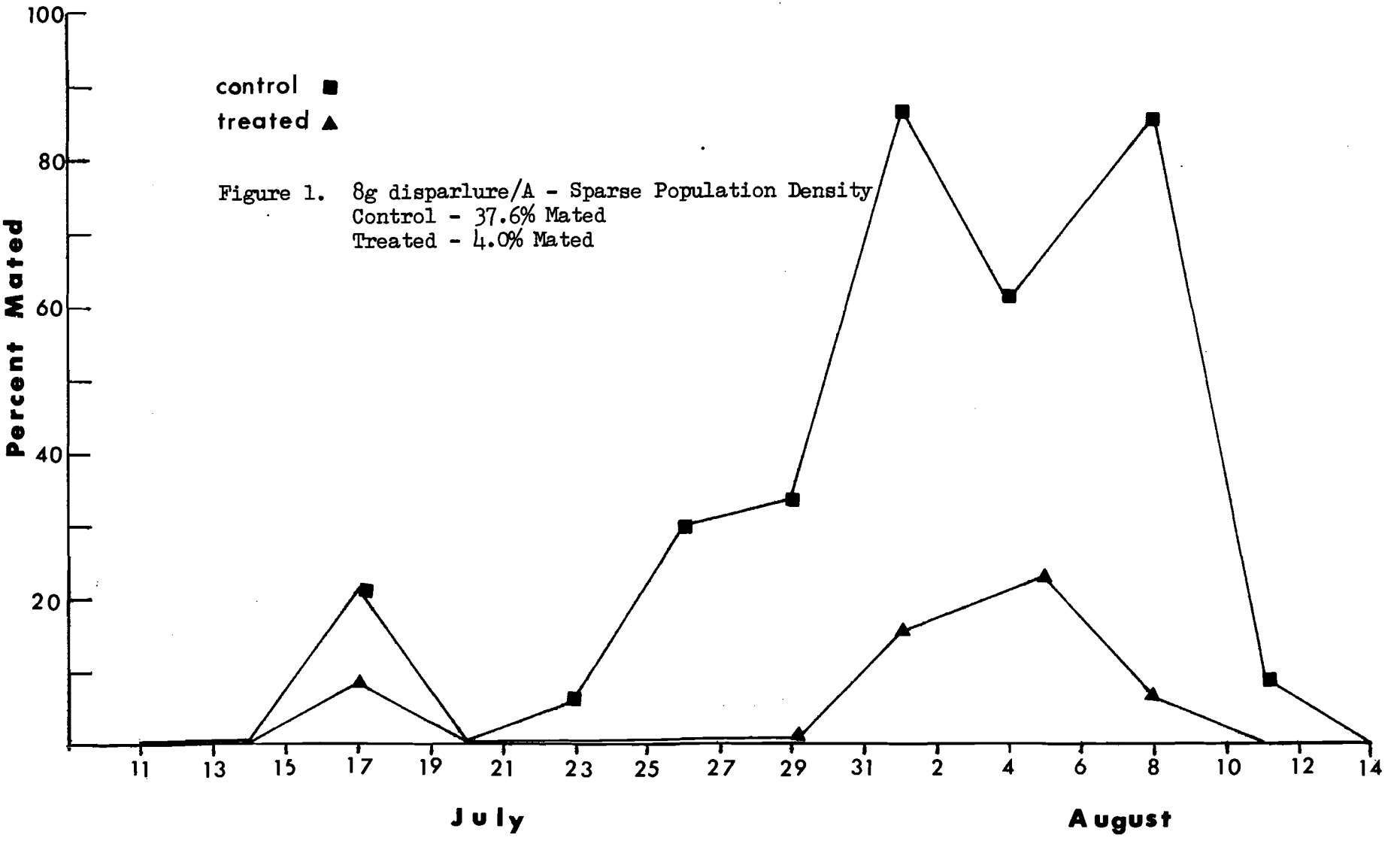

Figure 1. 8g disparlure/A - Sparse Population Density
Control - 37.6% Mated
Treated - 4.0% Mated

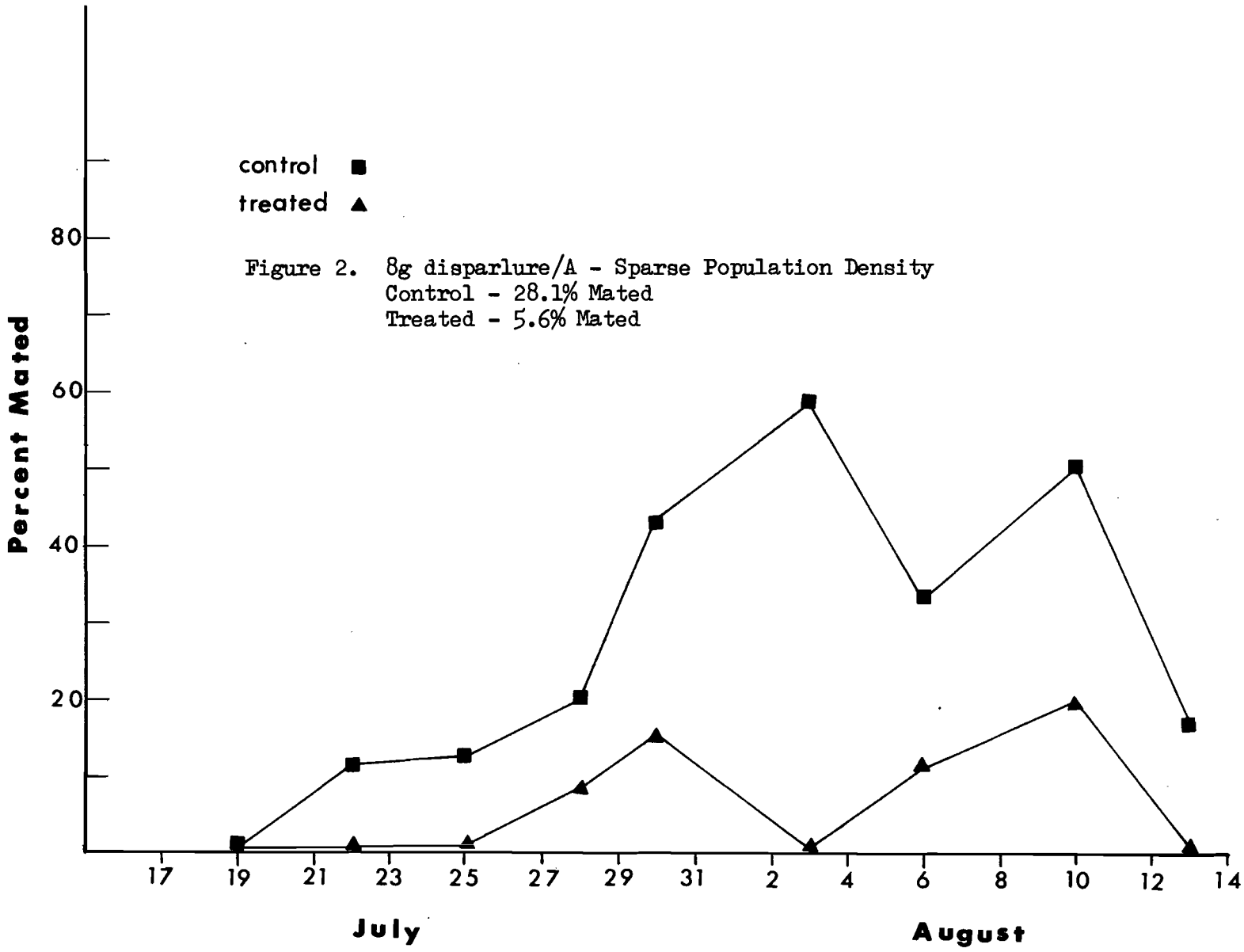

Figure 2. 8g disparlure/A - Sparse Population Density
Control - 28.1% Mated
Treated - 5.6% Mated

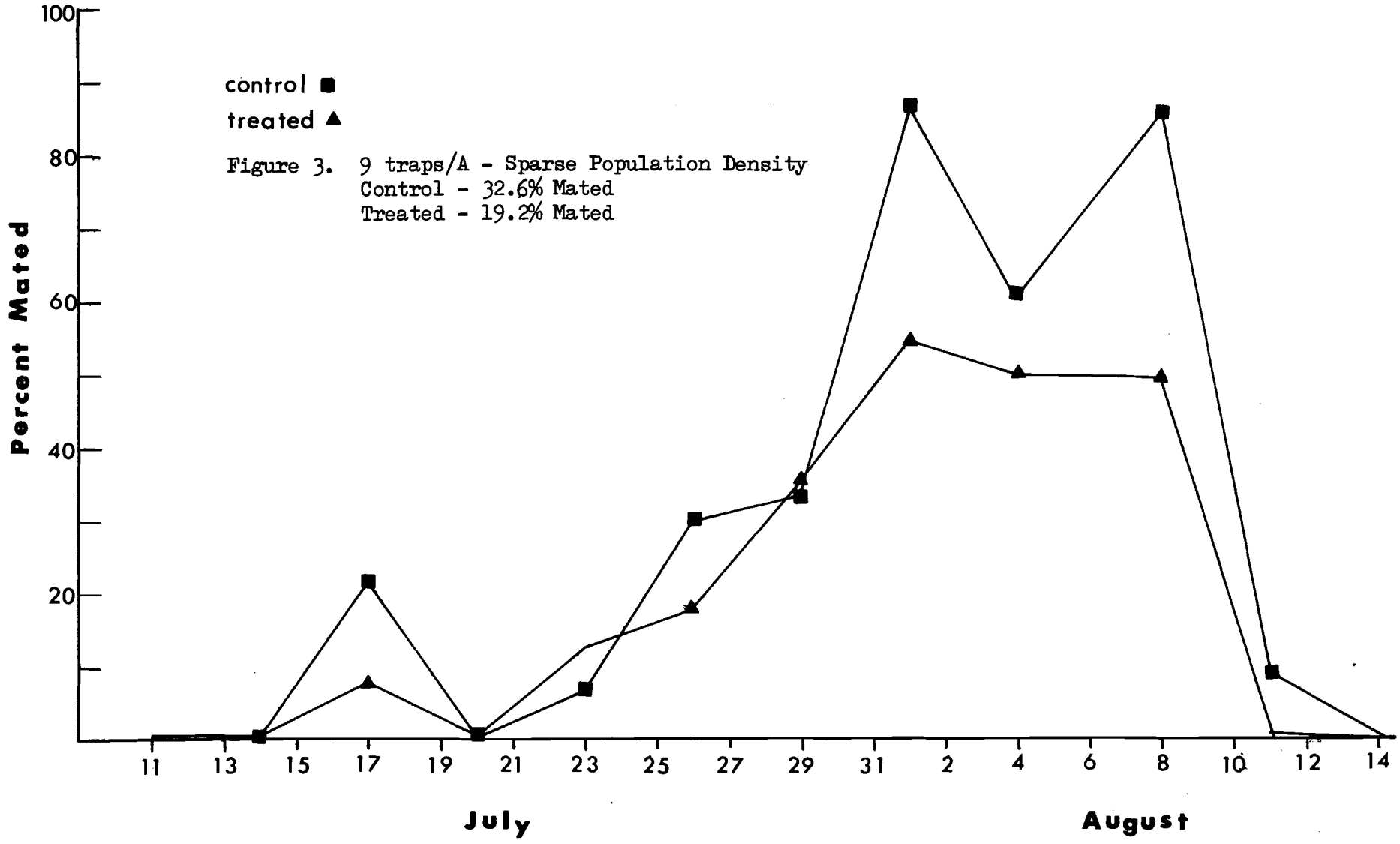

Figure 3. 9 traps/A - Sparse Population Density
Control - 32.6% Mated
Treated - 19.2% Mated

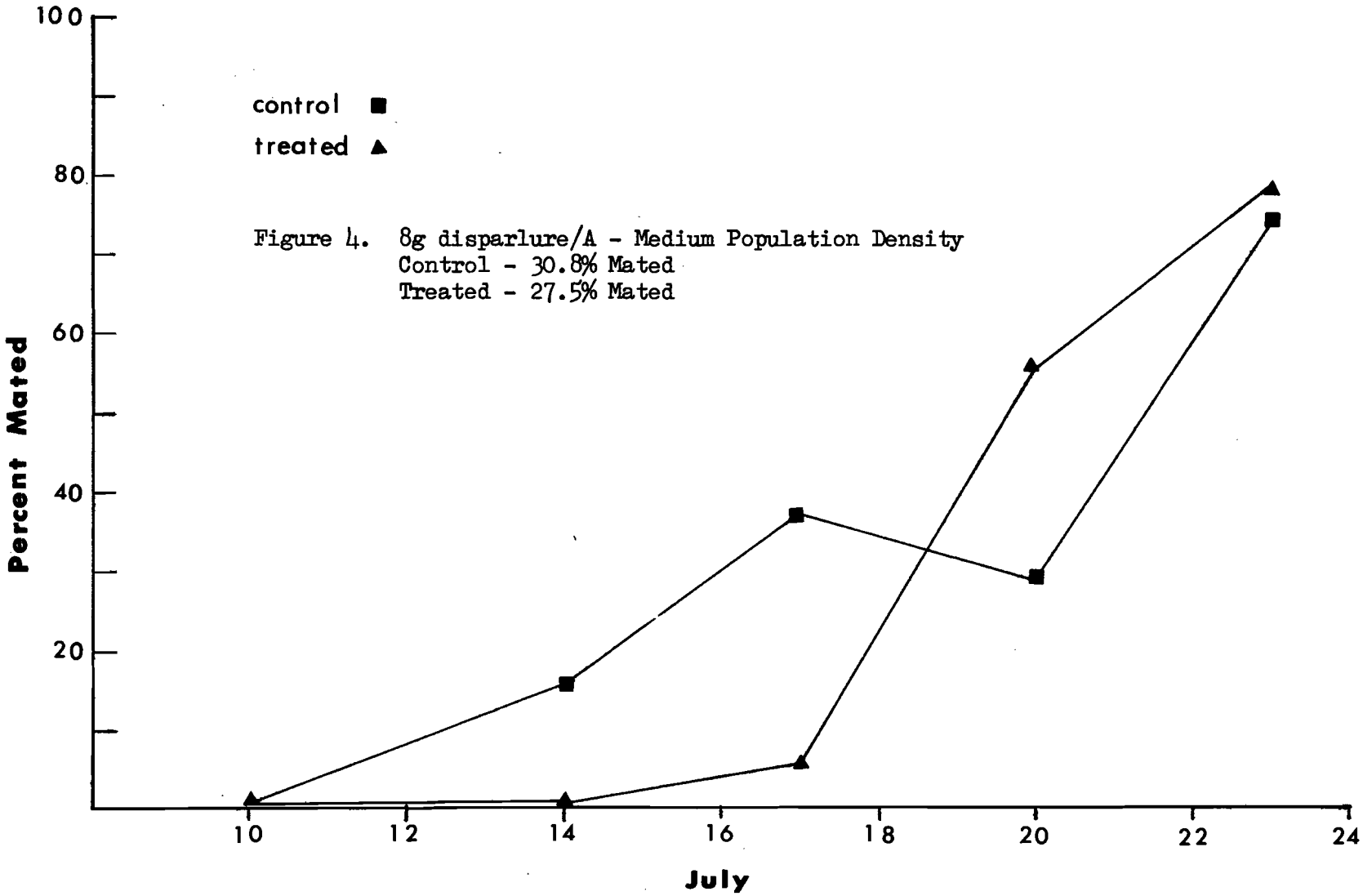

Figure 4. 8g disparlure/A - Medium Population Density
Control - 30.8% Mated
Treated - 27.5% Mated

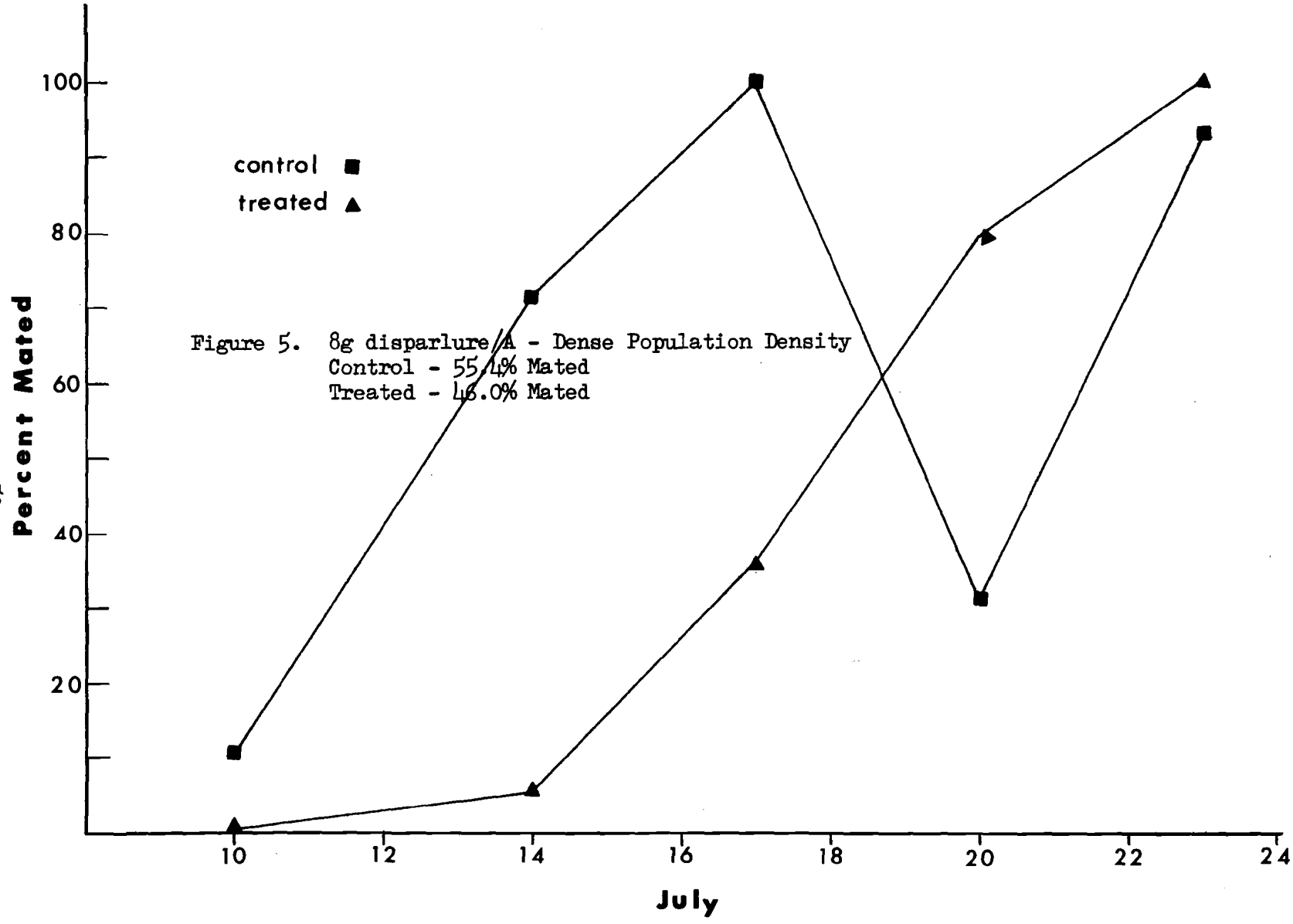

Figure 5. 8g disparlure/A - Dense Population Density
Control - 55.4% Mated
Treated - 46.0% Mated

Project Number: GM 6.2.1
Project Title: Comparative Attractancy of Synthetic and Natural Disparlure and Other Pheromonal Components
Report Period: September 1, 1975 - March 31, 1976
Report Type: Final
Project Leaders: Charles P. Schwalbe, R. Reeves, O. T. Forrester

This project has been assumed by Dr. Ring Carde (Michigan State University) through a cooperative agreement with the ARS. This laboratory is involved to the extent of providing Dr. Carde with extracts of emission from calling female moths and male moths for bioassay.

Project Number: GM 6.2.2
Project Title: Responses of Male Gypsy Moths to Traps as Affected by the Rate of Pheromone Release
Report Period: September 1, 1975 - March 31, 1976
Report Type: Interim
Project Leader: Charles P. Schwalbe

Laboratory evaluation of pheromone release from hollow fibers demonstrates that emission is constant for at least 25 days. Rate of release is ca 4.4 ug/day at 25°C. Interestingly, emission rate is not influenced by the velocity of air passing over the dispenser. This precise and predictable pheromone dispensing unit will be used to attempt to demonstrate the range of release rates necessary to achieve maximum attractancy. These data will be useful in developing specifications for baits used in the 1977 survey and detection program.

Project Number: GM 6.2.3
Project Title: Periodicity of Pheromone Release from Female Gypsy Moths
Report Period: September 1, 1975 - March 31, 1976
Report Type: Interim
Project Leaders: Robert G. Reeves, O. T. Forrester, C. P. Schwalbe

Pheromone has been collected from 689 lab-reared 1-2 day old females for a period of 3 days each as of 3/19/76. No test has been made to determine the amount of lure that has been collected.

Project Number: GM 6.2.5
Project Title: Degree of Water Absorption in Trap Paper Samples
Report Period: September 1, 1975 - March 31, 1976
Report Type: Final
Project Leader: Joseph G. R. Tardif

Appendix No. 2 is a special memorandum to the files detailing procedures, data and conclusions resulting from this project.

Project Number: GM 6.2.6
Project Title: Comparative Study of Trap Adhesives
Report Period: September 1, 1975 - March 31, 1976
Report Type: Interim
Project Leader: Edward C. Paszek

Objectives: The following samples of the trap adhesives are in the pro-
cess of aging in the greenhouse in Delta traps (temperature range of
65°F to 90°F) in a preliminary study which will be followed with a cham
ber bioassay with ♂♂ moths. The samples will be evaluated in field tes
in 1976.

	Weight Loss	Degree of Tackiness 65-67°F	Degree of Tackiness 78-80°F
Tack Trap (new sample)1/	0.8 g	very tacky	very tacky - 3"
Tack Trap (old sample)1/	0.85 g	very tacky	very tacky - 3"
Huge-Excelcide2/	0	stiff	tacky - 1/2" pu
Tree Tanglefoot3/	0	stiff	tacky to semi-l 0 pull
Phercon adhesive4/	0	stiff	tacky - 1/2" pu
Stikem Special5/	0	tacky	tacky - 1/2" pu
Bird Tanglefoot3/	0	stiff	tacky - 1/2" pu
Stikem6/	0	very stiff (eliminated furth screening)	

Approximately 44 sq. in. of the trap interior was coated with 8 grams of
adhesive on 1/14/76. After 6 weeks of greenhouse aging traps were weigh
for loss of weight of adhesive and checked for degree of tackiness.

1/ Animal Repellants Inc., Griffin, GA
2/ Huge Company, Inc., St. Louis, MO
3/ Tanglefoot Co. Inc., Grand Rapids, MI
4/ Phercon Supply Service, Palo Alto, CA
5/ Michel and Pelton Co., Emeryville, CA
6/ Biocarta Corp., New York, NY

Project Number: GM 6.2.7
Project Title: Color Fading in Trap Paper Samples
Report Period: September 1, 1975 - March 31, 1976
Report Type: Final
Project Leader: Joseph G. R. Tardif

An accelerated weathering test was developed for use in the laboratory to determine weathering properties of trap fabrication materials. Commercially prepared 1975 Delta traps weathered poorly and faded completely after short exposure to sunlight. These techniques are useful for quality control monitoring of trap materials.

Paperboard samples of orange colored 1975 paper (Tetron) and orange #1608 prototype paper were cut into 10 cm x 10 cm square pieces and placed 45 cm under a sterilamp fixture #131936 equipped with a Rayonet 782130 UV lamp. The samples were allowed to "cook" under these conditions for 160 hours. Controls of the same material were held in normal room lighting conditions.

Results: When compared to the control, the treated 1975 (Tetron) orange had lost a great deal of color. The color on the #1608 (prototype) paper did not bleach out; but it did darken or lose its original brilliance. This change in #1608 paper was not objectionable. The color lost in the 1975 paper reflects poor weathering properties and indicates that excessive fading will occur under field conditions.

References Cited:

Maksimovic, M. 1958. Experimental Research on the Influence of Temperature upon the Development and the Population Dynamics of the Gypsy Moth (*Liparis dispar L.*). Posebno Czdanje Bioloskog Instituta NR Srbijc. 3:115 pp.

Tanner, J. A., and L. F. Kennedy, 1975. Hatch Rates of Laboratory Produced Eggs as Affected by Duration of Refrigeration. Jan.-Aug. Laboratory Report, Gypsy Moth Methods Development Laboratory. :112

Project Number: GM 5.3.6
Project Title: Comparison of Different Egg Storage Techniques on the Hatchability of Eggs
Report Period: September 1975 - March 1976
Report Type: Final
Project Leaders: John Allen Tanner, L. F. Kennedy

Table 1. The Hatchability of Eggs as Affected by Egg Storage Technique

		Storage Technique		
Type Eggs	Location	Free[1]	Cheese Cloth[2]	Plastic Wrap[3]
Laboratory	Refrigerator	75.0	70.6	43.4
"	Field	88.2	77.8	43.8
Field	Refrigerator	98.6	98.6	98.3
"	Field	97.7	98.8	47.5

1/ Stapled to log or tree.
2/ Covered 250 ml urine cup

Laboratory eggs were affected by the storage technique utilized (Table 1.). The hatch rate of masses stored in plastic covered cups was 32 t 44% lower than masses stored free. However, covering the cups with cheese cloth reduced the rate only 4 to 10%.

The hatch rate of field collected eggs apparently was reduced only whe the masses were stored outdoors in cups covered with plastic (Table 1. However, masses from one replicate produced no hatch while masses from the second replicate produced 98.5% hatch yielding the average of 47.5 Some mortality factor other than storage technique likely caused the l hatch rate.

Under field conditions, hatch rate of laboratory produced eggs was hig when stored free or in cups covered with cheese cloth than when stored in plastic covered cups. Storage of field collected masses under fiel conditions reduced the hatch rate when the masses were stored in cups covered with plastic but did not affect the hatch rate of the other storage techniques.

Conclusions:

1. Laboratory egg masses stored free within a walk-in cooler exh high incidence of hatch.
2. Storing eggs within the walk-in cooler in plastic covered cup reduces hatch.
3. Storing laboratory eggs under simulated field conditions incr embryo survival.

Project Number: GM 5.3.8
Project Title: Effect of Relative Humidity on Hatch Rate
Report Period: September 1, 1975 - March 31, 1976
Report Type: Final
Project Leaders: John Allen Tanner and L. F. Kennedy

Table 1. Hatch Rates of *L. dispar* Eggs As Affected by Relative Humidity and Storage Techniques.[1]

Storage Technique	Percent Relative Humidity			
	23	50	73	100
Free[2]	77.9	68.5	75.6	78.8
Container	71.1	73.8	22.1	06.3

[1] Refrigerator malfunction forced experiment to be conducted in a walk-in cooler (2°C, 80-90% RH).
[2] Masses scatter within desiccator.

High relative humidities reduced the hatch rates of masses stored in plastic-wrap sealed containers; relative humidity did not affect the hatch rate of the scattered masses (Table 1.). Increasing the humidity may stimulate respiration resulting in reduced oxygen tension in closed containers. Embryo mortality would result from anoxia.

These results may explain the low hatch rate found in Project Number GM 5.3.6 (Comparison of Different Egg Storage Techniques on the Hatchability of Eggs) when laboratory eggs were enclosed in plastic covered containers. The cups were located either in a refrigerator (walk-in cooler used above) or in the field and in both cases the recorded humidity was extremely high. The differences in hatch between field collected and laboratory reared eggs in GM 5.3.6 may indicate a difference in their respiration rate under similar conditions.

Conclusion:
Laboratory-produced eggs should not be stored in plastic enclosed urine cups under conditions of high humidity.

Project Number: GM 5.3.9
Project Title: Effect of Chilling Duration on Egg Hatchability
Report Period: September 1, 1975 - March 31, 1976
Report Type: Final
Project Leaders: John Allen Tanner, L. F. Kennedy

Mechanical problems forced a premature termination of this experiment and at the present time no further testing is planned.

Project Number: GM 5.3.10
Project Title: Hatch Rates of Laboratory Produced Eggs as Affected by Duration of Refrigeration.
Report Period: September 1, 1975 - March 31, 1976
Report Type: Final
Project Leaders: John Allen Tanner, L. F. Kennedy

Eggs from broken-up masses and dehaired masses not treated with Clorox® or Captan® produced a superficial hatch without cold treatment to break diapause (Fig. 1.). This phenomenon has been observed by several investigators (Forbush and Fernald 1896, Maksimovic 1958, and Leonard 1968), but published attempts to develop nondiapausing strains have not been successful (Leonard 1968).

Compared to dehaired eggs, those non-dehaired responded more slowly to the diapause breaking effects of cold temperature. Non-dehaired eggs also yielded greater hatch (less mortality) with extended exposure to cold temperature. The insulating ability of L. dispar hairs was also demonstrated by Maksimovic (1958) utilizing field collected eggs. These data indicate that to insure minimum embryo mortality, laboratory eggs should not be dehaired prior to cold treatment; maximum hatch can be assured by refrigeration of eggs at least 98 days but not more than 210 days.

Treating dehaired eggs with Clorox® and Captan® prior to refrigeration depressed the hatch rate slightly but not significantly.

References Cited:

Forbush, E. H. and C. H. Fernald, 1896. The Gypsy Moth Porthetria dispar (L.). Mass. Board Agr. Rept.: 495 pp.

Leonard, D. E. 1968. Diapause in the Gypsy Moth. J. Econ. Entomol. 61 (3): 596-598

Maksimovic, M. 1958. Experimental Research on the Influence of Temperature upon the Development and the Population Dynamics of the Gypsy Moth (Liparis dispar L.). Posebno Izdanje Bioloskog Institute NR Srbije, 3:115 pp.

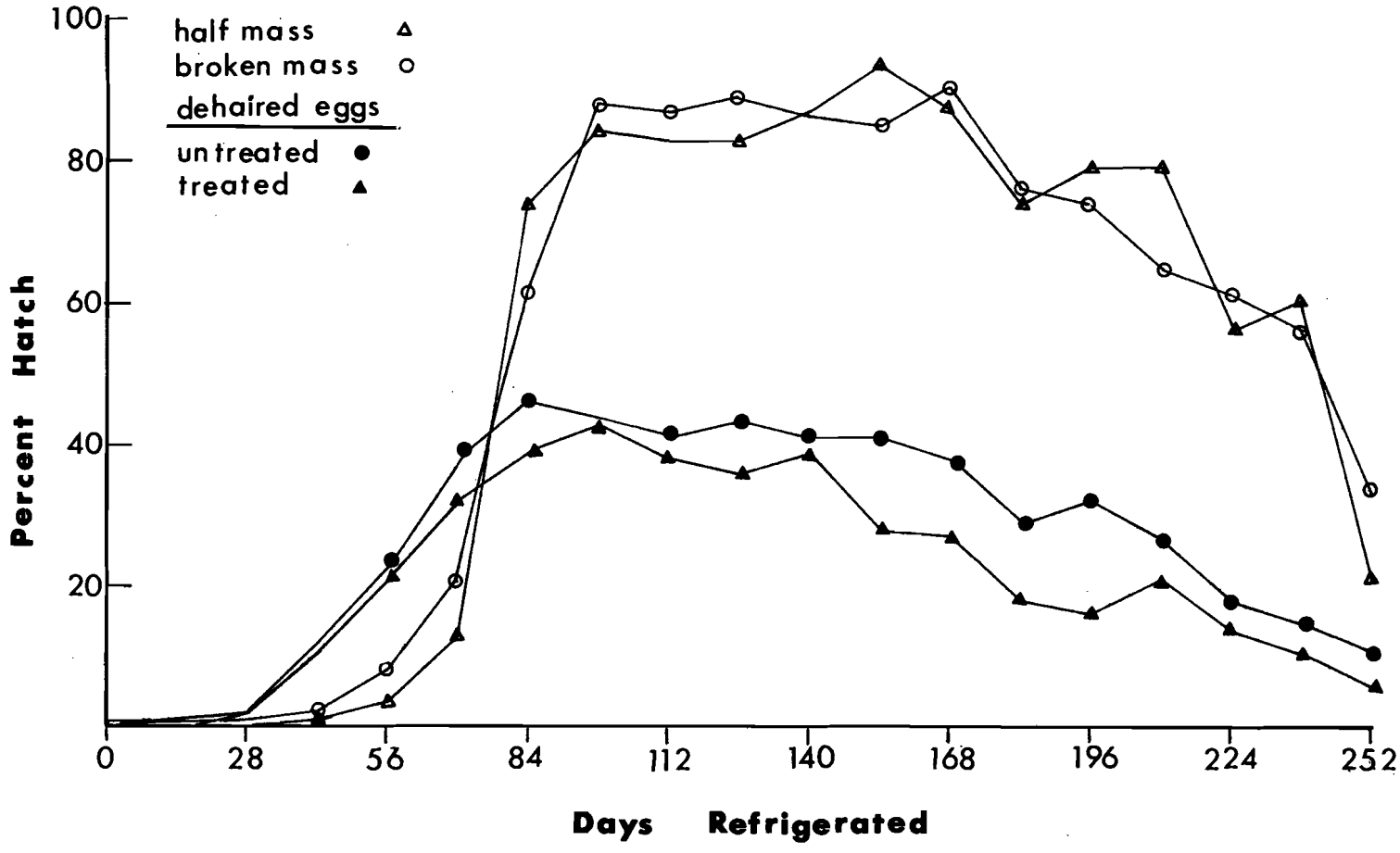
half mass
broken mass
dehaired eggs
untreated
treated
100
80
60
40
20
Percent Hatch
0
28
56
84
112
140
168
196
224
252
Days Refrigerated

Project Number: GM 5.3.11
Project Title: Effect on the Hatch Rate of Dehairing L. dispar Egg Masses Prior to Incubation
Report Period: September 1975 - March 1976
Report Type: Final
Project Leaders: John Allen Tanner, L. F. Kennedy

Results: The mean hatch rates of dehaired and non-dehaired half masses were 74.3 and 80.2 percent respectively; t-test produced no significant difference between treatment means. However, when corresponding half masses were compared by x^2, a significant number of non-dehaired half masses produced the higher hatch rate.

Conclusion: Dehairing L. dispar eggs prior to incubation for hatch reduces the hatch rate slightly but not significantly. However, personal observations in other tests indicate that under certain conditions, dehairing may have a more pronounced effect on hatch than observed above. This phenomenon should be further tested.

Project Number: GM 6.3.1
Project Title: Hatch Rate of L. dispar Eggs as Affected by Precooling Storage Techniques
Report Period: September 1, 1975 - March 31, 1976
Report Type: Interim
Project Leaders: John Allen Tanner and L. F. Kennedy

The currently used precooling storage technique has never been properly demonstrated to be necessary. Embryo mortality is a problem which is greatly limiting the production of gypsy moth in this laboratory. This experiment investigates the possibility of reducing mortality by modifying the presently used storage techniques.

Methods:
The following precooling (15°C, varied RH, 24L:0D) techniques will be examined.

No Egg Masses	Container	Covering	Position
50	250 ml urine cup	4 layers plastic wrap	upright(contr
"	"	"	inverted
"	"	open	upright
"	"	"	inverted
"	16 oz unwaxed Dixie® container	Plastic Closure	upright
"	"	"	upright

Prior to refrigeration, open urine cups will be covered with four layers of plastic. Egg masses from one 16 oz Dixie® container will be placed into a urine cup and covered with plastic wrap. The remaining Dixie® cup will be placed into refrigeration as is. All urine cups will be stored during 150 days refrigeration (4°C) in an inverted position. After refrigeration, 25 masses from each group of masses will be incubated (22°C, 95-99% RH, 14L:10D). Three replicates of the test will be conducted.

Project Number: GM 6.3.2
Project Title: The Hatch Rate of L. dispar eggs as Affected by the Precooling Period and the Duration of the Embryonation Period
Report Period: September 1975 - March 1976
Project Type: Interim
Project Leaders: John Allen Tanner and Leonard F. Kennedy

The objectives of this test are to determine the minimum embryonation period required for survival of L. dispar embryos during refrigeration and to determine the necessity of a precooling period prior to refrigeration.

Methods: This study will be in part a refinement of tests conducted during 1974-75 concerning the duration of the embryonation period. Rates of embryonation and hatch will be determined from egg masses held under the following conditions prior to refrigeration at 4°C for 150 days.

Days Exposed	
22°C	15°C
7	10
17	-
14	10
24	-
21	10
31	-
28	10
38	-
35	10
45	-

After refrigeration each egg mass will be individually incubated (22°C, 95-99% RH, 14L:10D) until eclosion ceases with records maintained as to the number of incubation days to initiate and complete hatch, and the percent embryonation and eclosion.

Project Number: GM 6.3.3
Project Title: The Hatch Rate of L. dispar Eggs as Affected by Treatment with Clorox® and Captan®
Report Period: September 1975 - March 1976
Project Type: Interim
Project Leaders: John Allen Tanner and Leonard F. Kennedy

Otis laboratory eggs are normally treated with a .1% solution of Clorox® and a 10% solution of Captan® to suppress fungal growth. The eggs are then incubated at 26.7°C, 95-99% RH, and 14L:10D photoperiod to insure rapid and uniform hatch. In checking past records, it was observed that treating the eggs with Captan® and incubating them at 26.7°C was never fully investigated as to their effect on the hatch rate. The low hatch rates now being obtained in the culture warrant a deeper look at these treatments.

Methods: This experiment will be developed in conjunction with the preparation of eggs for use in the culture. Nine 100-egg samples will be randomly selected from a large group of dehaired egg masses. A second group of samples will be taken after the eggs have been treated with a .1% Clorox® solution, and a final group of samples to be taken after the eggs are treated with a 10% solution of Captan®. Three 100-egg samples from each treatment will be incubated at 22°C, 95-99% RH, and 14L:10D photoperiod. A second group of three samples from each treatment will be incubated under the normal culture condition of 26.7°C, 95-99% RH, and 14L:10D photoperiod, with the remaining samples to be incubated under 26.7°C, 60-70% RH, and 14L: 10D photoperiod. Percent hatch will be based on the number of embryonated eggs only. Ten replicates will be performed over a period of time.

Project Number: GM 6.3.4
Project Title: Gypsy Moth Mass Rearing: Evaluation of Method for Surface Sterilization of Eggs and/or Pupae
Report Period: December 15, 1975 - March 31, 1976
Report Type: Interim
Project Leaders: Martin Shapiro, R. A. Bell

At present, gypsy moth eggs are dehaired, surface sterilized in a Clorox® solution, rinsed in water, and air-dried. This method may result in excessive desiccation of eggs and consequent poor hatch because of dechorionation by the hypochlorite. Alternative methods of surface sterilization that are more compatible with a mass rearing operation are being investigated.

Guerra and Ouye (1968) reported on a successful thermal treatment for surface sterilization of eggs of 4 lepidopterous insects by exposing them to 43°C for 1 hour. In the present study, gypsy moth egg masses (Dighton, MA wild strain) in the post-diapause stage were dehaired and groups of 100 eggs were placed in 100 x 15 mm plastic petri dishes and incubated at 43, 47, and 52°C for various times (Table 1.).

Table 1. Effect of Heat Treatment upon Egg Hatch of "Wild" Gypsy Moths

Temperature	Treatment Time	Percent Reduction in Egg Hatch[1]
43°C	1 hr	0
	2 hr	15
	4 hr	60
	6 hr	100
47°C	1 hr	15
	2 hr	23
	3 hr	50
	4 hr	56
52°C	15 min	5
	30 min	34
	45 min	40
	1 hr	70

1/ Expressed as percent of unheated controls; control hatch=57%

These preliminary data are encouraging, as it appears that gypsy moth eggs can withstand exposure to 43 or 47°C for 1 hour with little or no reduction of egg hatch.

Subsequent tests are planned in which the effect of heat treatment in the range of 43 - 47°C upon adventitious and pathogenic microorganisms will be determined.

Reference Cited:

Guerra, A. A. and M. T. Ouye. 1968. Hatch, larval development and adult longevity of four lepidopterous species after thermal treatment of eggs. J. Econ. Entomol. 61: 14-16.

Project Number: GM 6.3.5
Project Title: Mass rearing: Evaluation and Development of More Economical Diets and More Efficient Techniques for Rearing and Handling Larval Gypsy Moths
Report Period: October 1975 - March 31, 1976
Report Type: Preliminary
Project Leaders: Robert A. Bell, M. Shapiro, C. Owens

Diets: Several low cost diets used for mass rearing other lepidopterous insects were tested for rearing the gypsy moth. Most of the diets evaluated contained wheat germ and casein, wheat and soybean flour (WSB) or dried beans or peas and torula yeast as the principal sources of nutrients. Specific diets included in the evaluations were various wheat germ casein based formulations previously reported for rearing gypsy moths (O'Dell and Rollinson, 1966; Leonard and Doane, 1966; Magnoler, 1970 and Tardif, 1975) and the tobacco hornworm (Yamamoto, 1969); a wheat-soy-blend (WSB) diet (Burton and Perkins, 1972) and various modifications of a lima bean diet (Shorey, 1963).

All of the wheat germ-casein diets were adequate for rearing the gypsy moth but the formulations are relatively complex, i.e., require numerous ingredients, and expensive, the cost ranging from 0.70/liter for the hornworm diet to 1.02/L for the presently used APHIS modification of the O'Dell and Rollinson formulation. The results of several series of tests have shown that the lima bean diet is an excellent medium for rearing the gypsy moth and can be formulated for less than one half the cost of the presently used wheat germ casein based diet. Oddly, none of the other varieties of beans - pinto, navy, etc. or peas supported good growth and development.

Several tests in progress indicate that formulations in which part of the lima beans is replaced by wheat germ and/or alphacel is superior to lima bean alone. The importance of this may be attributed more to extra bulk and water holding capacity of the diet rather than superiority in nutritive value.

In one test using lima beans and WSB (1:1), neonate larvae of a Dighton, Mass. wild strain were reared to the adult stage without requiring a change of diet; survival (neonate larvae to adult) was 80-100% (2 replicates; n = 50/rep), pupal weights averaged 0.6 and 2.4 g for ♂'s and ♀'s respectively and eggs/♀/1 day averaged over 700. Unfortunately, many of the other diets included in the experiment dried excessively because of a lack of suitable lids and, therefore, reliable data could not be obtained. The test is being repeated using ten different diet formulations and plastic coated lids; growth response is adequate to excellent in almost all of the formulations.

Effects of Temperature on Diet: In a preliminary study, it was found that the lima bean diet lost much of its nutritive value when blended at high temperatures of 80°C or more. The test involved rearing larval gypsy moths (Dighton wild strain) on diets in which all nutrients were added to a

water-agar mixture and blended at 85°C in one case and at 60°C in the other. None of the larvae reared on the diet subjected to the higher temperature developed beyond the early 5th instar whereas 70% of those reared on the diet prepared at 60°C reached the pupal stage and emerged as adults. Additional studies are being carried out in which nutrients are blended at temperatures lower than 60°F to determine whether the nutritive value can be further improved.

Agar substitutes: Considerable emphasis has been given to the problem of finding suitable low cost gels to replace agar which comprises 50% or more of the cost of most insect diets. Several starches, cellulose compounds, pectins, gums and carrageenans were tested during the past few months. The most satisfactory agar substitute yet tested involves a combination of carageenan HWG® (1.5%) and locust bean gum (0.5%). Because of loss of nutritive value at high temperatures, it is desirable to blend the lima bean diet at 60°C. We have achieved this by blending the gelling agents, HWG, locust bean gum and any non-nutritive bulk ingredient e.g., alphacel, in boiling water. The mixture is then cooled to 60°, and the nutrients are added. However, the diet is very viscous and not easy to pour into small containers. Tests are in progress in which the carageenan and locust bean gum was substituted for agar in several different diets. The results so far indicate that although such diets are not quite as palatable as those formulated with agar, as indicated by slightly slower development of the larvae, they will still be quite satisfactory for rearing the gypsy moth. By using the carageenan and locust gum instead of agar, the lima bean based diets can be formulated for 25-30¢/liter i.e., less than one-third the cost of the presently used diet for rearing gypsy moths.

Rearing containers: Several types of containers for individual and aggregate rearing were tested. These included several types of polyethylene, styrene and metal trays, various crispers and food containers, paper and aluminum hexcels, plastic cell-tray units and various paper and plastic 1-2 oz. cups or creamers with paper or polyethylene lids. The most suitable container for individually rearing the gypsy moth was a 1.5 oz (2.5 x 5 cm) polystyrene cup (Thunderbird Plastics, El Paso, Texas) and a polyvinyl coated paper lid (Standard Cap and Seal, Chamblee, GA). These cups have been adopted for further testing of diets and other experiments since they are relatively low cost (about .01/cup) and allow rearing of larvae to adults without a change of diet at humidities of 50 to 60% (which is comfortable for the worker).

For aggregate rearing, we have not found the ideal solution, but in preliminary tests, 2 oz (2.5 x 6.5 cm) polystyrene squat cups (1.5¢/cup and lid) with polyethylene snap-on lids have permitted good development of 3-4 larvae/container. We would prefer a paper lid with a wax or plastic coating but we have not yet located a source of such lids of the proper size. We also feel that a slightly larger container, perhaps holding 3-4 oz and accomodating 5-6 larvae will be preferable to the 2 oz size.

In the next few weeks, we intend to provide specifications for production of a mold to be used in forming cell tray units from light gauge plastic. One cell tray unit will be comprised of round cells suitable for individual rearing; the other will have cells large enough to rear 5-6 larvae. All cells will be molded to accept individual paper lids that are readily available from commercial sources. With such cell-tray units, the option is available for using individual lids or heat sealing waxed paper lidding

over the entire cell tray unit. Calculations show that using the cell tray system, container costs could be reduced from $12.00 (present cost) to about $1.50-3.00/thousand insects.

References Cited:

Burton, R. L. and W. D. Perkins. 1972. WSB, a new laboratory diet for the corn earworm and the fall armyworm. J. Econ. Entomol. 65: 385-386

Leonard, D. E. and C. C. Doane. 1966. An artificial diet for the Gypsy Moth, Porthetria dispar (Lepidoptera: Lymantriidae). J. Econ. Entomol. 59: 462-464.

Magnoler, A. 1970. A wheat germ medium for rearing of the Gypsy Moth, Lymantria dispar L. Entomophaga. 15: 401-406

O'Dell, T. M. and W. D. Rollinson. 1966. A technique for rearing Gypsy Moth, Porthetria dispar (L.), on an artificial diet. J. Econ. Entomol. 59: 741-742.

Shorey, H. H. 1963. A simple artificial rearing medium for the cabbage looper. J. Econ. Entomol. 56: 536-537

Tardif, J. G. R. 1975. Techniques for large scale production of Gypsy Moth diet. APHIS 81 - 23. 12 pp.

Yamamoto, R. T. 1969. Mass rearing of the tobacco hornworm II larval rearing and pupation. J. Econ. Entomol. 62: 1427-1431.

Project Number: GM 6.3.6
Project Title: Establishment of standards for monitoring colony performance and quality of mass reared gypsy moths.
Report Period: January 1, 1976 - March 31, 1976
Report Type: Preliminary
Project Leaders: Robert A. Bell and Martin Shapiro

A study has been initiated in which a wild (Dighton, MA) strain and a long-term colonized strain (NJF_{13}) are being reared on various diets in both constant and fluctuating temperature regimens. Growth, developmental reproductive behavior and egg hatch of the two strains will be compared as well as relative suitability for virus production (i.e., susceptibility to virus and virulence of virus produced) and pheromone testing. This study should provide information relating to the question of whether prolonged colonization has resulted in loss of vigor and overall quality of the gypsy moth.

The establishment of routine procedures for monitoring performance and quality will necessarily have to be deferred until this summer when hopefully we can have a prototype mass rearing facility in operation and some baseline data from the test outlined above.

Project Number: GM 6.3.7
Project Title: Monitoring for Pathogens and Adventitious Microbes Associated with Gypsy Moth Rearing and Development of Effective Sanitation Procedures .
Report Period: September 1, 1975 - March 31, 1976
Report Type: Interim
Project Leaders: Martin Shapiro, R. A. Bell

Pathogen Monitoring: The most common microorganisms encountered in Gypsy Moth rearing are fungi belonging to the genera Rhizopus, Aspergillus and Penicillium. Thus far, bacteria and viruses have been encountered only rarely particularly in strains that have been reared for several generations in the laboratory i.e. NJF_{13}. Fungal growth has been a problem where (1) aeration in the rearing container has been poor or the humidity was high, and (2) it was necessary to add fresh media for re-feeding.

A lima bean diet adopted for routine rearing and testing of the gypsy moth contains 3 antimicrobials: Methyl-para-hydroxy-benzoate (MPHB) [1.6 gm/1000 gm (w/w)], sorbic acid [0.8 gm/1000 gm (w/w)] and formalin [9.0 gm of a 1:10 dilution of stock solution (37%)]. Microbiol contamination of the lima bean diet has not occurred except in cases 1 and 2, mentioned above.

Thus, a series of experiments was set up to determine the effect of eliminating certain of the antimicrobiol compounds from the diet. It was found that either MPHB alone or Sorbic acid alone at 1.6 gm/1000gm effectively inhibited microbiol growth. Formalin alone was unsatisfactory, as all rearing containers became contaminated with mold, i.e. Penicillium. Concentrations of MPHB and Sorbic acid below 1.6 gm/1000 gm did not prevent contamination.

Different antifungal compounds were tested for antimicrobiol activity and effects upon larval growth and development at 1.6 gm/1000 gm. In these tests, Sorbic acid and Captan inhibited fungal development. MPHB was successful in 60% of the rearing dishes, while formalin, Sodium propionate, Sodium benzoate, and Potassium sorbate were ineffective, i.e. fungal contamination ranged from 80-100%. Larval development was best on those diets containing Sorbic acid, Sodium propionate and Potassium sorbate. However, these tests will have to be repeated before definitive conclusions can be drawn.

It is interesting to note that two fungi were isolated, depending on the antimicrobiol used. A black mold, presumably an Aspergillus or a Mucor type occurred in diets containing Potassium sorbate and Sodium propionate. This mold occurred only on the larva feces, and not on the media itself in diets containing MPHB. A Penicillium was isolated in the diets containing Sodium benzoate. These tests will be repeated, but various combinations of antimicrobiols will be included. Dr. Richard Soper, USDA, ARS, Orono, Maine, has kindly consented to identify the fungi isolated in subsequent tests.

Bacteria have been isolated on diet at pH's 7-8. At pH's 4, 4.5, 5 (control diet), and 6, no bacteria have been observed. When aureomycin [1 gm/1000 gm] was added to diet at pH 7-8, bacterial growth was inhibited. Preliminary evidence indicates that larval growth and development e.g. to fifth instar is faster at pH's 7-8, but more work is needed to confirm this. Dr. Franklin Lewis, USDA, Forest Service, Hamden, CT, has kindly consented to identify the bacteria.

Further testing of antibacterial and antifungal compounds will be undertaken during the next report period.

Project Number: GM 6.3.8
Project Title: Development of Methods for Avoiding Contact with Insect Scales and Urticating Hairs Associated with the Adults, Eggs and Larvae of the Gypsy Moth
Report Period: September 1, 1975 - March 31, 1976
Report Type: Interim
Project Leaders: Charles D. Owens, R. A. Bell

Construction of a Prototype Mass Rearing Facility: Several mobile homes (12' x 50') used as temporary quarters for flood victims in Pennsylvania are being obtained from HUD. These are to be situated in Bldg. 1398 at Otis and altered to form a prototype mass rearing facility. The prototype will have the capacity to produce a minumum of 6,000 insects/day, 1000 (500 ♂♂ and 500♀♀) of which will be reared to the adult stage for maintenance of the colony and subsequent production of at least 36,000 larvae if required. The facility will be so designed that a full production facility can be obtained by simply expanding the larval holding area. A portion of the unit will be used to test the effectiveness of various types of filters to remove contaminating micro-organisms and insect parts (scales and hairs) from the rearing and work environment.

Handling of Moths and Collection of Eggs: A cage design has been constructed that provides a more convenient, less hazardous and laborious method for handling of adults and collection of eggs. Pupae of both sexes can be introduced into a tray-drawer arrangement that slides into the bottom of the cage. Adult moths upon emerging from the tray crawl immediately upon a paper substrate that lines the walls of the cage and is mounted on a roller unit attached on the outside of the cage. Each day the oviposition paper lining the cage can be pulled through a slot in the end of the assembly for vacuum removal of the moths, and the egg masses are simply cut from the paper and stored in appropriate containers. Calculations have shown that five of these units each made to accommodate 100 pairs of moths could be arranged along with a suitable vacuum system for removal of moths and scales in a room 6' x 6' x 8'. Moreover, with 500 newly emerged moth pairs being introduced into the system each day, a total yield of 200,000 to 300,000 eggs/day can be harvested with little labor input.

1975 Field Evaluation of Candidate Insecticides for Gypsy Moth Control

by

Larry L. Herbaugh[1], W. H. McLane[2],
C. R. Stacy[3], and J. A. Finney[4]

Abstract

Five commercial preparations of pesticides (CGA-18809, TH-6040, S-15126, SAN-197 and Sevin-4-Oil) were tested against gypsy moth larvae using various rates and formulations. Sevin-4-Oil, TH-6040 and S-15126 prevented defoliation and also caused population reduction (egg mass decline).

Introduction

Thousands of acres of forest are defoliated yearly by the gypsy moth, *Porthetria dispar* (L.). Because of this, investigations are conducted to evaluate different types of agents and techniques to control this pest. Presently, the most successful of these techniques is the restricted use of insecticides. Before these chemicals can be registered for use they must undergo extensive laboratory and field testing. Field trials reported here were with materials that showed minimal environmental hazard and a high potential for field use (i.e. efficaceous) These data are gathered through a screening program carried out at the USDA, Gypsy Moth Methods Development Laboratory, Otis Air Force Base, Massachusetts (McLane, 1973).

Materials and Methods

Four commercial preparations of test pesticides for gypsy moth control were field tested in 1975. These materials were selected for field testing because of the desirable characteristics demonstrated in laboratory screening. Each treatment was aerially applied to 50 acre plots (replicated 3 times) for evaluation. (See Table I for formulation). Two of the materials were field-tested in 1974. However, one was only on a limited scale and the other needed a follow-up test to substantiate its performance.

CGA-18809, an organophosphate, was field-tested in 1974 on one 50 acre plot and gave excellent foliage protection and larval mortality. Laboratory results demonstrated high activity as both a contact and a stomach poison of laboratory-reared gypsy moth larvae.

TH-6040 (Dimilin) is an insect growth regulator which was field-tested in 1974 and gave outstanding results with regard to larval mortality and egg mass reduction.

S-15126 (Malonoben) is a new class of pesticides belonging to a group called the benzylidene malononitriles. It was selected for field testing because of its performance in laboratory screening.

SAN-197, an organophosphate insecticide, also gave favorable results in laboratory tests.

Sevin-4-Oil is a carbamate insecticide currently used extensively for gypsy moth control. It was applied to three 50 acre plots at 1.0 lb ai/40 oz/acre with a 20% kerosene solvent. These plots were used as a standard with which to compare the unrigistered test materials.

Nine 50 acre plots were randomly placed throughout the treated areas so that the treated populations could be compared and evaluated against natural, untreated conditions.

Table I. Details of 1975 Formulations Field-tested

Material	Application rate/acre	Chemical Concentration	Sticker
CGA-18809			
a.	1 gal/acre	0.125 lb ai/gal	Chevron at 3% concentrati
b.	1 gal/acre	0.50 lb ai/gal	"
TH-6040			
a.	1 gal/acre	0.015 lb ai/gal	Chevron at 3% concentrat
b.	1 gal/acre	0.03 lb ai/gal	None
S-15126 (Malonoben)			
a.	1 gal/acre	0.125 lb ai/gal	None
b.	1 gal/acre	0.50 lb ai/gal	None
SAN-197			
a.	1 gal/acre	0.062 lb ai/gal	None
b.	1 gal/acre	0.25 lb ai/gal	None
Sevin-4-Oil	40 oz/acre	1.0 lb ai/gal	20% Kerosene (solvent)

An area in Clinton County, Pennsylvania which met the following criter was selected for establishing study plots: 1) a building population in which there had been no more than 1 year's noticeable defoliation prio to the test year, 2) a readily measureable population within the preferred range of 100 to 900 egg masses per acre, and 3) predominance of preferred host trees (oaks).

Each 50 acre square plot was laid out by establishing an accessible base corner and plotting boundary lines along compass headings. Marke

were placed at all four corners for aircraft guidance. These markers were constructed from white canvas bags slipped over folded branches on the ends of long saplings. These saplings, in turn, were raised through the canopy and fastened so that the bags protruded about 10 feet above tree top level. Within each 50 acre plot, 5 subplots (0.1 acre) or sampling units were randomly established. These subplots were representative of the entire plot and served as sampling points throughout the experiment. Sampling points were similarly established in untreated check areas to measure natural conditions.

The application schedule was designed so that material was to be applied when the majority of the larvae were in the late second instar stage and the oak foliage was 50-75% expanded. However, due to rains and extra warm weather the week prior to spraying, leaf expansion on preferred host plants was about 80%.

Materials were mixed and transferred into the aircraft with conventional equipment (mixing tank, pumps, hoses, measuring devices, and necessary safety equipment). All mixing and spraying equipment was thoroughly cleaned between each treatment to avoid adulteration. Radio communications were maintained between the ground crew and the spray plane with respect to ground conditions of wind velocity and materials dispersement. Application quality and dispersement was checked by placing red Kromekote cards on wire stands in each sampling unit. These were

placed just prior to spraying and removed for evaluation immediately after treatment. When possible, cards were used on woods roads to get information at the time of application.

All plots were treated with a Piper Pawnee aircraft equipped with a propeller-driven impeller pump and a conventional spray system (Table II). The airplane dispersed the material in 75 foot swaths at 100 mph as near to tree top level as possible with a ground wind velocity of less than 5 mph.

Table II. Configuration of spray systems utilized

Material	Orifice	Screen Mesh	psi	Degree to Slipstream
CGA-18809	D8-Hollow cone with 45° swirl plate	25 mesh	40	90
TH-6040(Dimilin)	"	"	40	90
S-15126(Malonoben)	"	"	40	90
SAN-197	"	"	40	90
Sevin-4-Oil	8002	50 mesh	40	90

Each treatment was evaluated from the standpoint of foliage protection, em/acre reduction and dropcloth mortality.

Foliage protection was determined from visual estimates of the degree of defoliation in each of the sampling plots at the termination of

larval feeding. These estimates were made in 20% increments and rated low, medium, and high, within the increment. Estimates were all performed by the same crew so that human judgement would remain constant. For computation purposes, the figures 7, 14, 20...87, 94, 100, were assigned as low, medium and high percentagees.

Each treated plot was measured against its corresponding geographic check and the average of these tabulations gave the percent reduction in defoliation (Fig. 2).

Each subplot was intensively surveyed in early spring to determine the number of egg masses/acre before treatment. Egg masses were collected adjacent to the sampling plots and were stratified to represent above and below the snowline. These collections were incubated in the laboratory to provide the following data: number of eggs/mass, number of larvae successfully hatched, and the percent hatch for each egg mass. An estimate of beginning larval population was computed by: (number egg mass/acre)(number eggs/mass)(percent hatch) = number of beginning larvae per acre.

The percent change in egg mass population was calculated after counting the egg masses in each subplot after leaf drop (Table III).

To determine residual effects on larval mortality, a 3' x 3' white drop cloth was placed under a representative host tree in each of the sampling

units. Daily readings were made and recorded on each of these until mortality ceased to be significant. This occurred in all cases in 96 hours or less (see Fig. I). No drop cloths were placed in TH-6040 plots because of its mode of action. The cadavers are similar to those infected with virus and tend to remain attached to the host plant, making dropcloth counts unreliable as indicators of larval mortality.

Application quality and dispersement was checked by placing red Kromekote cards on wire stands in each sampling unit. These were placed just prior to spraying and removed immediately after the plot was sprayed for determinations. When possible, these cards were used on woods roads to get immediate information as the pilot was spraying the plot.

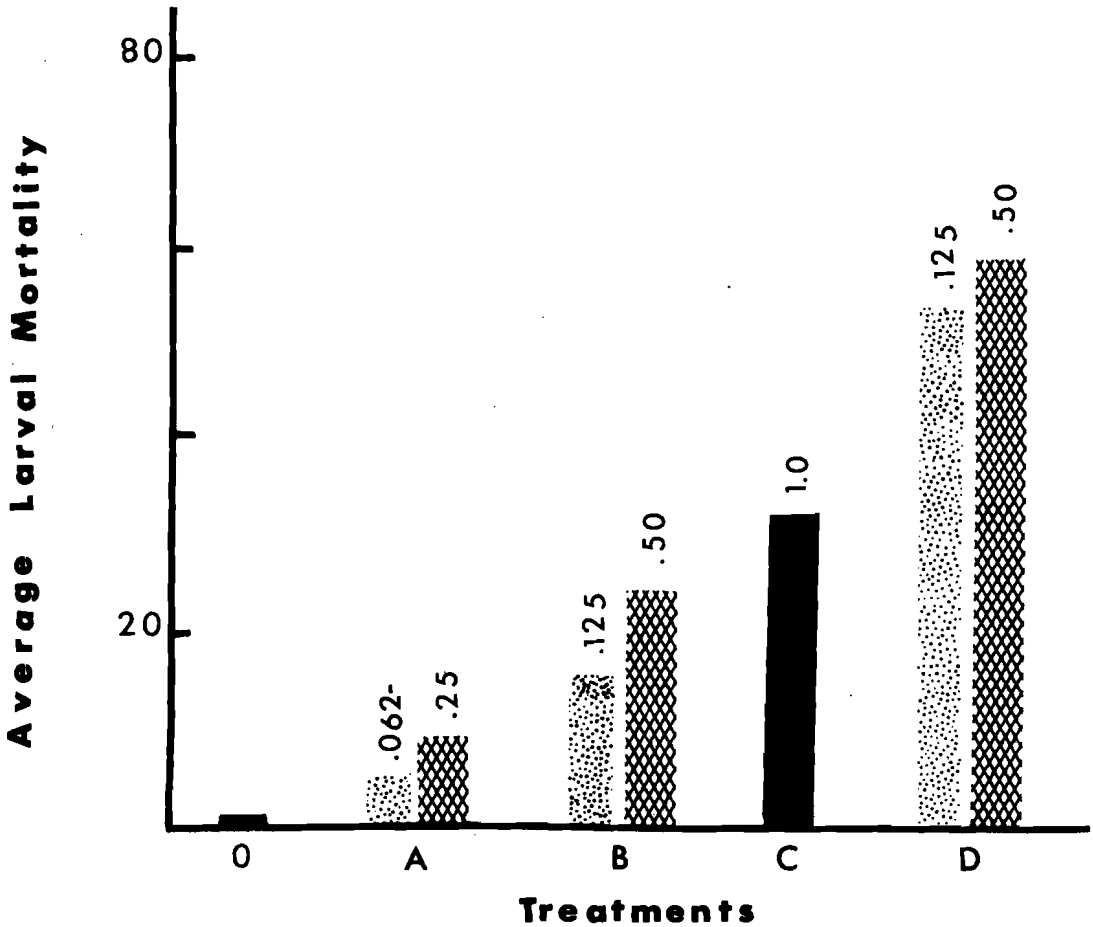

Larval mortality as determined by 3' x 3' dropcloth counts (96 hr. accumulation).

0 = Check A = SAN-197 B = CGA-18809
C = Sevin-4-Oil D = S-15126

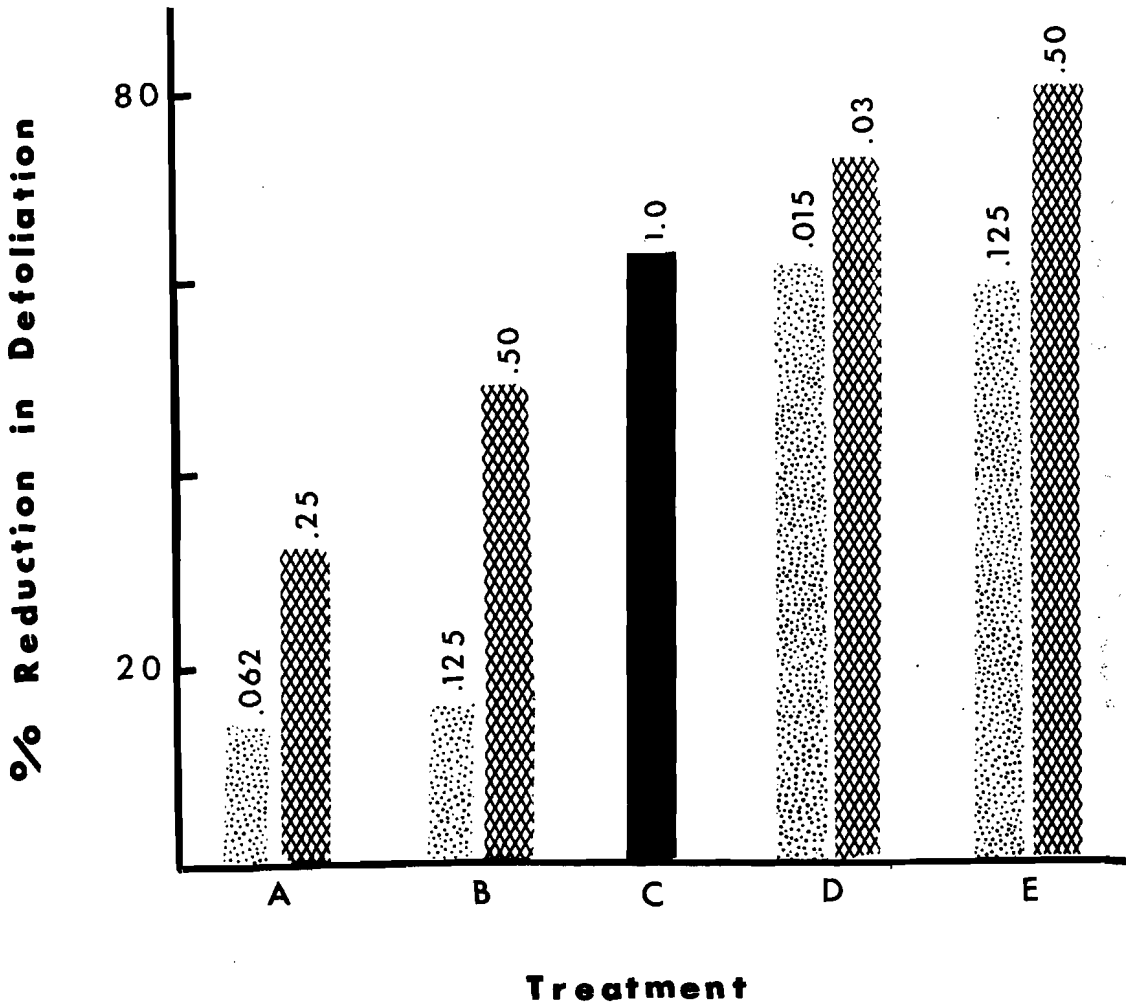

Reduction in defoliation calculated from defoliation in adjacent check plots.

A = SAN-197 B = CGA-18809 C = Sevin-4-Oil
D = TH-6040 E = S-15126

Table III. Population Trends (Treatment Average)

Treatment	Pre-Spray em/A	No. eggs/ mass	% Hatch	Pre-spray Larvae/A	Post-spray em/A	% Change in em/A
SAN-197						
.062 lb ai/gal/A	512	440	82	102,207	1490	+291
.25 lb ai/gal/A	417	321	78	111,523	1072	+257
CGA-18809						
.125 lb ai/gal/A	348	346	80	94,870	1537	+441
.50 lb ai/gal/A	517	348	77	145,800	1036	+200
Sevin-4-Oil						
1.0 lb ai/40 oz/A	436	344	82	133,420	118	-73
TH-6040						
.015 lb ai/gal/A	385	414	84	140,549	80	-80
.03 lb ai/gal/A	562	385	79	155,002	3	-99
S-15126						
.125 lb ai/gal/A	484	426	85	179,549	754	+155
.50 lb ai/gal/A	355	363	81	93,006	95	-74
Checks	383	394	80	119,342	1597	+416

Results and Conclusions

Treatment applications began on May 28 and were completed on June 2, 1975 using a USDA aircraft. During this period of time, 5 different chemicals were sprayed in 25 plots of 50 acres each in central Pennsylvania. During this period rain showers experienced on the night of May 29 and during the day on May 30. Severe isolated thunderstorms hit the plot area at 3 pm May 31 and rain continued until early after-

noon on June 1. Because of the rain, no plots were treated on May 30 and Sunday June 1. No problems or delays were encountered while mixing the materials and no mechanical problems were confronted.

Pre-treatment densities ranged from 80 to 1940 egg masses per acre. The average number of eggs per mass per sampling unit was from 145 to 817 with a hatching percentage range of 42 to 99. The beginning larval population ranged from 17,589 per acre to 610,324 per acre. The egg masses were generally of good size, which would indicate a healthy population. Observations showed that the target insects ranged from 1st to 3rd instar with the majority being 2nds at the time of treatment. However, due to rains and unseasonably warm weather the week before spraying, the leaves on host trees were about 90% expanded at treatment time.

Efficacy conclusions of the different chemicals tested were based on the results shown in Table III, and Figures I and II.

SAN-197 gave no reduction in egg mass density/acre; in fact it showed an increase similar to the untreated checks. It showed a low larval mortality in the drop cloths as well as very little foliage protection. Because of these facts, this material will not receive any immediate future field testing.

CGA-18809 was very similar to SAN-197 in the resulting egg mass density/acre after treatment. It did show some larval mortality and foliage

protection but even at the 0.50 lbs ai/acre the results were lower than the standard of Sevin-4-Oil. This material has been temporarily discontinued by the company for future field testing on gypsy moth larvae.

Sevin-4-Oil gave a good reduction in egg mass density/acre, a higher larval mortality and a higher degree of foliage protection than the two previous mentioned materials. However, it gave less larval mortality than S-15126 and less foliage protection than either TH-6040 or S-15126 at the higher dosages per acre.

TH-6040 gave outstanding reductions in egg mass density as well as good foliage protection. This material is presently going through channels for registration against gypsy moth larvae. Future field testing is anticipated.

S-15126 at 0.50 lb ai/acre gave excellent reduction in egg mass density/acre. It also showed a high larval mortality count as well as giving excellent foliage protection. However, this material has been temporarily removed from future field testing against gypsy moth larvae by the producers.

Of the five chemicals tested in 1975, only TH-6040 (now called Dimilin) will receive any field testing in the 1976 program.

Acknowledgements

The authors express their appreciation for the help and cooperation of the following:

Mr. Jack Henderson, Pilot, USDA-APHIS, Beltsville, MD

The staff of the Gypsy Moth Methods Development Laboratory, Otis Air Force Base, MA

District No. 7 of the Pennsylvania Bureau of Forestry

References Cited

McLane, W. H. 1973. A technique for screening candidate insecticides against the Gypsy Moth, Porthetria dispar (L.). USDA, APHIS 81-15.

Footnotes

1/ L. L. Herbaugh - Agriculturist, USDA, APHIS, Otis AFB, MA

2/ W. H. McLane - Biological Technician, USDA, APHIS, Otis AFB, MA

3/ C. R. Stacy - Biological Technician, USDA, APHIS, Otis AFB, MA

4/ J. A. Finney - Biological Aid, USDA, APHIS, Otis AFB, MA

Mention of a proprietary product in this publication does not constitute a guarantee or warranty of the product by the U. S. Department of Agriculture, nor imply its approval by the Department to the exclusion of other products that may be suitable too.

U.S. DEPARTMENT OF AGRICULTURE

Memorandum

ANIMAL AND PLANT HEALTH INSPECTION SE
Gypsy Moth Methods Development Labo
Otis Air Force Base
Massachusetts
02542

SUBJECT: Degree of Water Absorption in Trap Paper Samples

DATE: Feb. 3, 1976

TO : Files

Introduction: The commercially prepared delta traps of 1975 did not perform satisfactorily in the field. They absorbed too much water during rainy or humid conditions, distorted, and if handled when wet, usually delaminated where fastened with clips or staples. Because of the foregoing, a need for better paper such as that of the prototype is needed. This is the purpose and findings of this report.

Methods: Several methods of testing were employed to detect amounts of water absorbed by three candidate materials (prototype paper #1608, 1975 commercial trap type, and newly proposed #1485). These tests were:

Test A

1. Three samples were cut into 10 replicate 100 cm^2 pieces
2. Five replicates of each sample were left untreated and the remaining five were sealed on all edges by dipping in molten wax to a depth of approximately 1 cm.
3. Replicate samples were weighed on an analytical balance, totally immersed in a water bath at room temperature (20°C) for a given time, taken out and patted dry, allowed to dry at room temperature for ten minutes and reweighed.
4. Weight gain was recorded for 0.5 and 4 hours exposure

Test B

1. Five more replicates of each sample were prepared as in Step A-1.
2. The edges remained untreated, but a .64 cm hole was punched centrally and .95 cm from the top edge.
3. The replicates were then slid onto a .64 cm dia. rod. This allowed each piece to hang into a water bath with 17 mm of the bottoms exposed in the water (20°C).
4. Weighing prior to and after accomplished as in Test A.
5. Data was recorded and tabulated for 1 through 5 hours in 1 hour increments after patting dry.

Test C

1. One each of 1.5 cm^2 pieces of each sample were delaminated and the resultant interiors were taped down with edges adjacent to each other to allow scope examination.

2. Things observed were:
   a. fiber size
   b. density of fibers
   c. time for an ink drop to become absorbed.

Test D
Placed the Test B samples in a methylene blue water-dye bath solution for 16 hours and read the depth of penetration by depth gauge.

Test E
Formed a completed trap with each sample and weathered in a simulated rain chamber for an equivalent rainfall of 5 inches in 1 hour. Units were stapled to oak trunks as found in the field.

Results:

Table 1 indicates the average amount of water absorbed by the samples for a given time. The untreated edges had greater absorbancy than the treated edges and the 1975 sample far exceeded samples A and C. Test 1 indicates most absorption to originate from the edges.

Test B indicated a sharp rise for the three samples within the first hour after which time a more tapered progression resulted in a near linear fashion (Fig. 1).

As in Test A, the 1975 paper absorbed nearly 10 times more water than the proto paper and its #1485 proposed substitute.

Test C can only relate as a visual response of the observer since no attempt was made to measure or time the events. Observation #1: The fibers of the 1975 paper were quite longer and were less densely distributed. They were also more easily pulled apart when compared to the proto #1608 and proposed #1485 which both compared favorably. Observation #2: When a tiny drop of ink was placed on each 1.5 cm^2 sample while being observed under a scope, the 1975 paper acted like a blotter while the #1485 did not absorb till last. The diameter of the ink blot was greater for the 1975 paper as opposed to the blots of #1485 and #1608 papers which were similar.

Test D produced the following comparisons. Methylene blue dye solution was absorbed to a depth of 1.1 mm, 2.5 mm, and 18 mm for proposed #1485; 1975 commercial and proto #1608 respectively. This corroborated the three previous tests.

Test E again by observation indicated some water absorption after 5" of simulated rainfall. This was particularly true of 1975 paper which showed water absorption at the points of attachment to the trunk. The area affected radiated from the staples in both lid and body to a radius of 1.9 cm. The corners absorbed to a slighter degree (approx. .5 cm). The other two materials did not appear affected by this rainfall.

Joseph G. R. Tardif

J. G. R. Tardif
Biological Technician

Table I. Average water absorbed in grams vs. time exposed when totally immersed in water

Sample	Untreated Edges[1] 1/2hr @26°C	4hr @20°C	Factor[2]	Waxed Edges 1/2hr @26°C	4hr @20°C	Factor
A-#1485	.0520	.1116	1.8X	.0149	.0597	1.7X
B-#1975	.5702[3]	-	20.0X	.0100	-	1.2X
C-#1608	.0284	.0673		.0087	.0469	

1/ Ends of #1485 showed slight signs of swelling on edges after 4 hours.
2/ Water absorbancy factor using C's value as 1. (based on 1/2hr study).
3/ Ends of 1975 paper were quite swollen and some delamination occurred during the first 1/2 hour. Test was discontinued at this point for 1975 paper.

Figure 1.

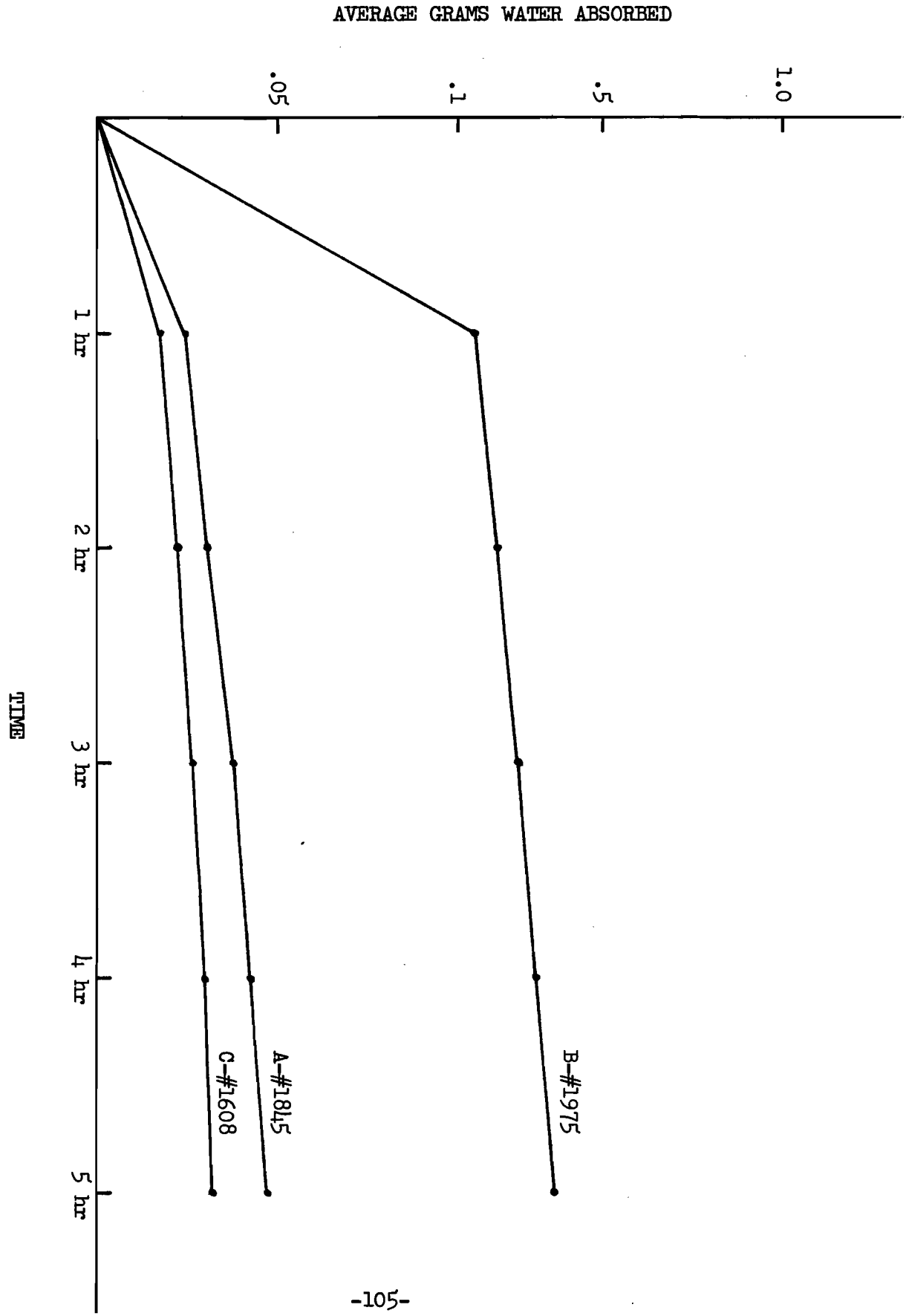
AVERAGE GRAMS WATER ABSORBED
1.0
.5
.1
.05
B-#1975
A-#1845
C-#1608
1 hr
2 hr
3 hr
4 hr
5 hr
TIME

THE PENNSYLVANIA STATE UNIVERSITY
152 DAVEY LABORATORY
UNIVERSITY PARK, PENNSYLVANIA 16802

College of Science
Department of Chemistry

September 22, 1975

TO: T. McIntyre

FROM: L. B. Hendry and Group

SUBJECT: Progress report for July-September, 1975 on "Chemical Residue Analysis in Ecosystems Sprayed in Communication Disruption Experiments with Disparlure".

THE PENNSYLVANIA STATE UNIVERSITY
152 DAVEY LABORATORY
UNIVERSITY PARK, PENNSYLVANIA 16802

ollege of Science
partment of Chemistry

Dear Sir:

As part of our cooperative agreement, "Chemical Residue Analysis in Ecosystems Sprayed in Communication Disruption Experiments with Disparlure", the following progress report describing analyses for the summer of 1975 is enclosed. The data below are for the revision of specific tasks in regard to foliage analyses only (see Tables).

The procedures used in procuring the data follow:

1. foliage was collected from sprayed areas at the top and middle of trees at least 20 m tall; foliage was also collected from ground cover (blueberry leaves);

2. 500 oak leaves (1000 blueberry leaves) from each collection were washed with redistilled acetone, dried with sodium sulfate and the solvent removed;

*3. the residue was chromatographed on silica gel thin layer plates using 50:50 hexane:methylene chloride as the developing solvent; a band having the same Rf as disparlure was eluted;

4. an internal standard was then added to the eluted sample and the mixture was subjected to gas chromatography on a 3% OV-1 column; a region having the same retention time as disparlure and the internal standard was collected;

5. computerized gas chromatography-mass spectrometry was performed on the purified samples; total spectra on electron impact and chemical ionization were used to identify disparlure (usually a check); mass fragmentograms of ions 183, 128, and 95 were used for quantitative analyses;

6. repetition of the entire procedure was periodically conducted to check the analytical methods.

* extreme precautions were taken to prevent any contamination (these will be included in the final report).

Disparlure residue in ng/leaf

Sample	Date 7/22	7/27	7/30	8/3	8/10	8/17	8/23*
W_1 B	1.90	24.2	.30	.21	.20	1.20	7.10
W_1 M	1.00	5.67	15.3	10.0	.50	2.70	7.00
W_1 T	18.0	3.5	.80	3.76	4.50	.30	.40
W_2 B	2.66	1.63	1.10	1.55	.20	.80	8.40
W_2 M	49.5	20.4	4.00	10.4	1.10	.10	19.5
W_2 T	12.0	1.85	3.80	1.56	.50	.90	5.40
X B	5.81	3.17	.90	1.35	.70	2.00	3.90
X M	9.32	1.80	.80	.48	58.7	6.60	4.80
X T	.59	1.28	.20	.14	.30	5.80	2.10
Y_1 B	1.22	5.33	18.4	.73	.40	.60	18.5
Y_1 M	8.54	20.2	26.1	5.13	31.9	5.10	6.50
Y_1 T	2.57	34.7	7.9	6.81	29.8	1.20	10.9
Y_2 B	13.1	1.43	3.7	.12	6.80	.10	5.00
Y_2 M	10.8	5.44	- -	19.6	21.8	5.50	1.90
Y_2 T	92.1	173.	.40	21.9	140.	.05	11.8
Z B	104.	31.1	27.4	33.3	8.80	.10	13.0
Z M	17.5	5.00	.60	2.96	3.00	18.5	13.1
Z T	44.8	71.4	.70	1.69	.90	5.70	21.8

W = 1975 NCR formulation
X = 1975 NCR beads - 1974 sticker
Y = 1974 formulation
Z = 1974 NCR beads in 1975 sticker

* data are preliminary for this date

Plot totals of ng/leaf disparlure in each location

Sample	Date 7/22	7/27	7/30	8/3	8/10	8/17	8/23*
W_1	20.9	33.4	16.4	13.9	5.2	4.2	12.1
W_2	64.2	23.5	8.5	13.5	1.8	1.8	33.3
X	15.6	6.25	1.9	1.97	59.7	14.4	10.8
Y_1	12.3	60.0	52.4	12.7	62.1	6.9	35.9
Y_2	116.	180.	4.1	41.6	103.8	5.7	18.7
Z	165.	107.	28.7	37.7	12.7	24.3	47.9

*data are preliminary for this date

These results do not allow any definitive statement about disparlure formulations. However, it is worthy to consider the following:

1. even distribution of disparlure may not occur during application;

2. encapsulated disparlure may move during weathering;

3. disparlure may evaporate and recondense on leaf surfaces;

4. disparlure may be available naturally in various plants, resulting in a high background (this data will be available at a later date);

5. weather conditions may play the major role in the effectiveness of microencapsulated disparlure particularly on the day of application;

6. disparlure residues can be found as late as five weeks after spray;

7. differences in foliage may effect evaporation rates; leaf chemicals may react with disparlure and microcapsules; growth of foliage may effect microcapsules.

LBH:bai

Enclosure

THE PENNSYLVANIA STATE UNIVERSITY
152 DAVEY LABORATORY
UNIVERSITY PARK, PENNSYLVANIA 16802

College of Science
Department of Chemistry

February 17, 1976

Dr. Charles P. Schwalbe
Gypsy Moth Methods Development Laboratory
USDA, APHIS Building 268
Otis Air Force Base
Massachusetts 02542

Dear Chuck:

This is a reply to your letter of February 9 and report for the second quarter (October - December 1975). As you may be aware, we have had a major disaster regarding our GCMS systems. For the past two and a half months we have not been able to get any data from the instrument due to a system breakdown which has required us to replace the disk drive, the entire computer, and finally a teletype. I have decided not to contact you for any assistance, since departmental monies appear to be available.

Nevertheless, presently (within the past 10 days) all of our instrumentation is working smoothly. The residue data on disparlure, as we discussed in New Orleans, is complicated by the chemistry of interfering GC peaks in oak leaf blanks with the identical molecular weight and similar mass spectral properties as disparlure. High pressure liquid chromatography using microstyrogel and micro C_{18} columns has aided in separating the "non-disparlure" peaks. Presently, we are working with Jack Plimmer's assistance (via his previous elegant EI-MS work) to locate the right peaks. It appears that isomeric epoxides are present, but whether disparlure itself is present has not been elucidated.

In our degradation of the epoxides with perchloric acid, to the diol, there is a definite shift in GC retention times and major changes in EI and CI GCMS data.

At the present time, our projections are to (1) take every sample from last summer (we have considerable samples for each trial) and rerun computerized CI and EI GCMS; (2) treat with perchloric acid and (3) repeat GCMS runs on all reaction products. By examining the differences in the CI-EI mass spectra we anticipate that quantitation of residue values of disparlure will be possible. The only difficulty in this procedure could be the problems of reaction chemistry ($HClO_4$ with a 10 ng or less reactant).

I realize that this data is critical to the disparlure program, and I have a full time effort on the project by several good analytical chemists. I will update you immediately of any further progress.

Very truly yours,

Lawrence B. Hendry
Assistant Professor of Chemistry

LBH:cwc
cc: T. McIntyre
M.L. McManus
C. Amyx
W.B. White
J. Plimmer
F.J. Mulhern

Cooperative Agreement 12-16-4-179

between

The Agricultural Experiment Station

and

The United States Department of Agriculture

Animal and Plant Health Inspection Service

Quarterly Report 1976 No. 2

Prepared by

V. C. Mastro

J. V. Richerson

E. A. Cameron

Department of Entomology

106 Patterson Building

The Pennsylvania State University

University Park, PA 16802

Note: This report includes interim results and tentative conclusions from work in progress. It is intended for official use only and is not to be cited or quoted as scientific literature.

During the period covered by this report summarization and analysis of the majority of the data was completed and is reported here. Manuscripts are now in preparation and will be submitted with Quarterly Report No. 3.

Trap Efficiency

Descriptions of traps and testing procedures used were reported in Quarterly Report No. 75-1 page 5-9 and Table 2. Statistical analysis of this data is presented in Tables 1 and 2 of this report.

Female moths, string traps, and screen traps were the most efficient in capturing male moths that had oriented to a tree or to a trap (female). Using either index for comparison no significant difference could be found between these two trap designs and virgin female moths. The string trap was significantly better in capturing males that had oriented to a tree than the screen trap. However, no real difference in their efficiency in capturing males that had oriented to a trap could be detected at the 5% level of significance.

Standard survey traps, Johnson and delta traps, were less efficient in capturing males as measured by either index than female moths, or string and screen traps. Comparing the two standard survey traps, the delta trap appeared to be slightly more efficient. Statistical analysis however, could not reveal any real differences between the two. Some modifications of the delta trap appear to increase its efficiency in capturing moths. The large cylinder trap, two flat delta traps, and two traps opened and face to face all appear to increase efficiency. However, more replications would be required to detect statistical differences.

Generally, traps where no particular entrance point was required of the male moth were the most efficient and compared favorably with virgin female moths. Traps with entrance ports on the bottom, large cylinder trap, and delta trap mod.-2, appeared to be more effective capturing males once they had oriented to the trap. Enlarging the ends of the standard delta trap appeared to detract from its performance.

This method of trap evaluation may determine which trap is more efficient in capturing moths and revealing design characteristics beneficial to a traps' effectiveness or attractiveness. Any trap showing promise using this method should be tested further with the goals for traps performance in mind. In other words, different uses may require different trap designs.

Simulated Population Density vs. Trap Catch

Summarized in Table 1 of the previous quarterly report are the results of trap vs. density test using circular plot design. Figure 1 of this report presents the same data in graphical form. A significant correlation was found between the number of moths released, plotted on x-axis, correlation coefficient 0.809. This relationship indicates trap catch is a good indicator of male moth population density. However, traps are capturing a very small proportion of the population; regression equation $Y=0.012 + (0.0068)X$. The implications of these findings are that when working with low densities, large numbers of traps will be needed to detect small differences in populations.

As reported earlier, a traps "effective zone" under the simulated conditions tested does not exceed 30 meters, therefore traps could be placed very densely for intensive monitoring.

Adding virgin female moths to the test design at two simulated male densities, 1697/ha and 848/ha; and at male to female ratios of 12:1 and 6:1; did not appear to significantly reduce trap catch with 0.28% and 0.42% recovery, respectively. These percentages are smaller than one would expect from the regression equation in Fig. 1 but without many more replications at these densities real differences would be hard to detect.

Results of the large scale test described in the previous report, using a grid of delta traps and a simulated male and female population in the grid center are expanded on here. Although all traps in the grid recovered ca. 0.55% of the male moths released, traps having male and female populations simulated

around them recovered only 1 male or 0.08% of those released. Male moths remained active around the center four traps and the border of traps for a long period of time after release. Constant observations of the center four traps yielded a total of 21 males orienting to these traps. Observations of the border traps were made for half hour periods with half hour breaks between observation. These observations yielded an additional 23 males orienting to 12 traps. Although male activity decreased with time from release, males were still actively searching the area nearly five hours and forty minutes after moths were released.

Orientations to traps were recorded to nearly the time when observations were concluded. The mean elapsed time from initiation of the test (male release) to trap orientations was 92 minutes. Further evidence that males remained in the test area and were actively searching is results of the female mating observations. Two females were mated more than five hours after test initiation. The mean elapsed time for twenty-seven females to be mated occurred 88 minutes after test initiation; the median elapsed time was 62 minutes. Females in this test may have been competing with traps around the center four subplots for male moths. Twenty-seven out of the thirty-one females recovered or 87% had been mated.

Circular-plot tests not reported in the previous quarterly report, using simulated densities of 848 males/ha were conducted using a delta trap in the plot center. A single virgin female was placed on an oak tree approximately 10 meters from the trap tree. Female moths and traps were both placed 1.5 m above the ground on trees 25 cm or greater in diameter. Males were released as previously described, along eight radians after females had initiated calling. Females were not permitted to mate for a half hour period. Any male attempting to mate was recorded and removed. At the end of the half hour period the female was removed from the plot. For the next half hour period when no female moths were in the plot, trap catch was recorded. Half hour periods when a female was

in the plot were alternated with half hour periods when only a delta trap was present. For three trials of this test design a total of twenty-five mating attempts were recorded. Four males total were trapped for the three replications. No males were trapped during the period when a female was actively calling. However, percentage recovery, 0.56%, of males is not inconsistent with results from circular plot test where only males were released. Females continued to be mated more than three hours after the test was begun. Females were also placed out overnight in all three replicates and checked the following day for fertilization. Two of the three females had egg masses which contained embryonated eggs.

Natural Population Density vs. Trap Catch

Density estimation in natural populations was undertaken on a limited scale during the 1975 field season. Estimates of the density were made using two techniques. Marking and recapture of males used to estimate moth density on four different sampling dates. Male moths, ca. one hundred, were captured with insect nets in the area around trap locations. Traps were speced 75 meters apart and placed in a 5 x 5 grid. Captured moths were marked in the manner previously described and released randomly in the circle around the trap. Before marked males were released an unused delta trap baited with a hercon wick was placed on an oak tree, 25 cm or greater DBH and 1.5 m from the ground. The following day approximately 24 hours from male moth release traps were replaced and taken to the laboratory for determinations of the number of marked and unmarked males captured.

On each sampling date males were captured, marked and released in four to six trap areas. Results of these trials presented on Table 3 are totals for all trap areas used on a single day. Population estimates were computed using Bailey's refinement of Dahl's formula (Hanson, 1967).

The second estimate of population density in Table 4 is computed from the regression equation described by trap capture in simulated densities, $Y=0.012 + (0.0068)X$. Estimates for population size presented are based on total catch for several traps. Without extrapolation of the regression line beyond the simulated densities tested this pooled data exceeds the measured limits. Mean catch/trap, however, is near the upper limit of measured densities and provides a better estimate of population than results from a single trap.

Trap Catch vs. Pupal Samples

Pupal populations were sampled for each trap location in 5 x 5 grid described previously. One oak tree 13 cm DBH or greater was banded at each location. Pupal collections were made under burlap bands every six to ten days. All trees over 13 cm DBH in a 0.1 ha. circular area were counted and recorded according to species. Trap catch for the 25 traps was recorded on a daily basis during the major flight period and weekly in the early season. Linear regression analysis was computed comparing:

1) trap catch vs. total number of pupae multiplied by the number of oak trees in a 0.1 ha circular plot.

2) trap catch vs. total number of pupae multiplied by the total number of trees in a 0.1 ha circular plot.

3) trap catch vs. total number of pupae.

Both the variables were stabilized for variances using $\sqrt{x}$ transformations. Correlation coefficients for the above regressions were respectively 0.732, 0.784, 0.748.

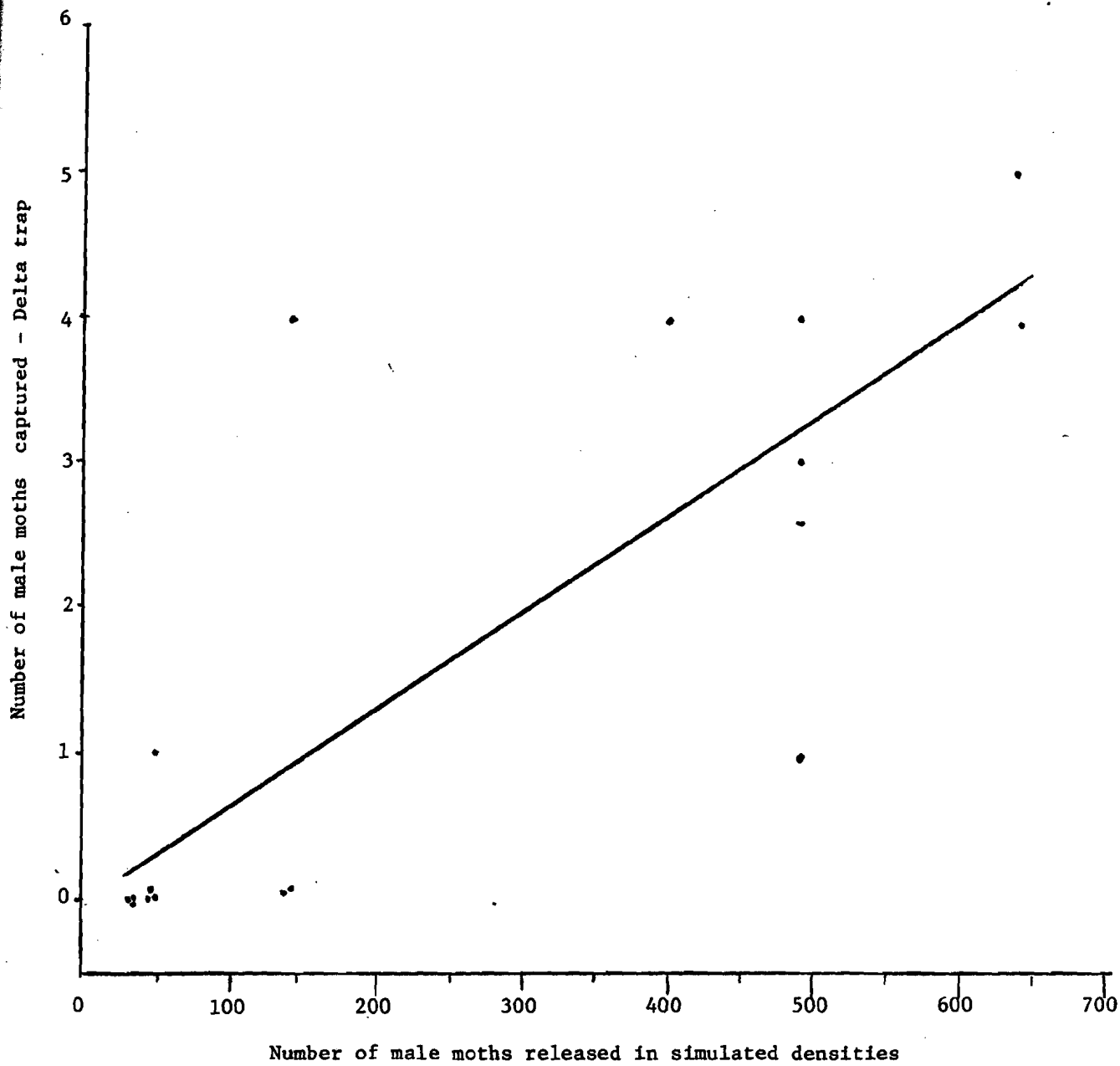

Fig. 1 - Regression of number of male moths trapped in delta traps vrs. the number of male moths released to simulate various population densities. The regression formula is Y = -.012 + (0.0068) X. The correlation coefficient is 0.809, which is significant at the 0.99 probability level.

Table 1. Mean percentages of male gypsy moths orienting to various trap designs that were captured--an index of trap efficiency.

Trap design	No. of one-half hour observations	Mean percentage of male moths orienting to a trap (female) captured (or mated)	
virgin females	15	81.6	a
string trap	4	80.5	a b
screen trap	10	71.3	a b c
Delta-mod. 5	10	38.7	d
Delta-mod. 4	5	37.2	d e
Delta-mod. 7	10	28.8	d e f
Delta-mod. 2	5	27.7	d e f
Delta-mod. 3	5	20.6	d e f
Delta	11	19.3	e f
Delta-mod. 1	5	17.7	d e f
Delta-mod. 6	5	16.6	d e f
Johnson	5	12.6	e f
Johnson open end	5	11.6	e f
Delta prototype	5	6.8	e f
Delta open end	5	6.4	f

[1] Vertically means followed by the same letter are not significantly different at the 5% level according to Fisher's Significant Difference test for unequal data sets.

Table 2. Mean percentages of male gypsy moths orienting to trees, on which various trap designs were placed, that were captured--an index of trap efficiency.

Trap design	No. of one half hour observations	Mean percentage of male moths orienting to a tree captured (or mated)	
string trap	4[1]	51.8	a
virgin females	15	40.9	a b
screen trap	10	30.1	b c
Delta-mod. 4	5	20.9	c d
Delta-mod. 7	10	19.9	c d e
Delta-mod. 5	10	16.1	d e f
Delta-mod. 1	5	12.4	d e f
Delta-mod. 3	5	12.1	d e f
Delta-mod. 6	5	11.3	d e f
Delta	11	7.8	d e f
Delta-mod. 2	5	7.6	d e f
Johnson open end	5	7.2	d e f
Johnson	5	6.8	d e f
Delta prototype	5	3.5	d f
Delta open end	-------- no data	----------	

[1]Vertically means followed by the same letter are not significantly different at the 5% level according to Fisher's Significant Difference test for unequal data sets.

Table 3. Density estimates from a natural gypsy moth population using marked-recapture and regression methods for population estimation.

Date Sampled	No. of subplots sampled	No. of males marked and released	Total No. males trapped	No. marked males trapped	Estimated population using Dahl estimator	95% confidence interval for Dahl estimate	Population estimate Y = -0.012+(0.0068)X
7-24-75	6	598	35	5	3,588	10,764-2,153	5,149
7-25-75	6	520	33	2	5,893	10,847-4,046	4 855
7-28-75	5	464	37	4	3,526	14,693-2,260	5,443
7-30-75	4	364	28	6	1,508	3,968- 931	4,119

MEETINGS AND CONSULTATIONS WITH COOPERATORS

Oct. 1, 2, 3 -- Eastern Branch Meeting, Entomological Society of America, Philadelphia, Pennsylvania

-- Cameron

Jan. 6, 7 -- Annual meeting of the technical committee of the Regional Project NE-84, New Haven, Connecticut

-- Richerson, Cameron, Mastro

APPENDIX

Literature Cited:

Hanson, W. R. 1967. Estimating the density of an animal population. J. Res. on the Lepi. 6(3) 203-247.