1982

ANNUAL REPORT

U. S. DEPARTMENT OF AGRICULTURE

ANIMAL AND PLANT HEALTH INSPECTION SERVICE

PLANT PROTECTION AND QUARANTINE

IMPORTED FIRE ANT STATION

3505 25TH AVENUE

P. O. BOX 2278

GULFPORT, MS. 39503

1982 ANNUAL REPORT

Imported Fire Ant Station

Whiteville Methods Development Center

U. S. Department of Agriculture

Animal and Plant Health Inspection Serviee

Plant Protection and Quarantine Programs

Gulfport, Miss.

Homer L. Collins	Station Leader
Jerry G. Medley	Entomologist (Retired)
Dudley J. Adams	Biological Technician
Michael J. Cuevas	Biological Technician (Retired)
Avel L. Ladner	Biological Technician
Claude J. Mauffray	Biological Technician
Bettie J. Gilbert	Secretary

These reports were assembled for the information of the U.S. Department of Agriculture, Animal and Plant Health Inspection Service, Plant Protection and Quarantine personnel and key personnel in other agencies engaged in imported fire ant programs. Statements in some instances are based on preliminary uncompleted, or unconfirmed experiments or observations; therefore, the data are not ready for publication or public distribution.

Results of insecticide tests are reported here. Mention of trade names or propriety products does not constitute an endorsement or recommendation for use by the U. S. Department of Agriculture.

Contents

Project No.	Project Title	Page
IFA 82-1	Aerial Application of bait toxicants	
	A. Fall 1981 tests	1
	B. Spring 1982 tests.	8
	C. Fall 1982 tests	14
IFA 82-2	Evaluation of Lindane for IFA quarantine treatments	22
IFA 82-3-A	Evaluation of potting soil toxicants	40
IFA 82-3-B	Phytotoxicity of Dursban FA-5 to foliage plants	43
IFA 82-4	Evaluation of pour-on treatments for certification of vegetable transplants. . .	51
IFA 82-7	Shelf life studies with Avermectin fire ant bait	57
IFA 82-8-A	Testing and development of alternate carriers for bait formulations	63
IFA 82-8-B	Comparison of 3 AMDRO formulations for treatment of individual IFA colonies . . .	67
Appendix 1	Aerial application of imported fire ant baits.	70

Summary

Aerial application of bait toxicants:

Results with Bant following a series of applications in October 1981 were highly variable, ranging from 96% to 25% colony mortality at 1.25 lbs. of bait per acre (page 1).

In the Spring of 1982, large scale field tests with Merck MK-936 (Avermectin) confirmed laboratory and small plot field tests which had previously indicated that MK-936 effectively prevents reproduction by IFA queens. Colony mortality ranged from 87 to 45% 12 weeks after treatment with a pregelled defatted corn formulation applied at a rate of 25 to 50 mg AI/Acre (page 8).

Preliminary results of a series of trials conducted in October 1982 indicated that ferriamicide provided 74% colony mortality. Other treatments in this series were less effective in providing colony mortality, but the effects of Avermectin on brood production were again quite evident (page 14).

Evaluation of Lindane for quarantine treatments:

Lindane was investigated as a broad spectrum residual treatment for various commodities including grass sod, balled and burlapped plants and potting soil. Although the initial toxicity of lindane to the IFA is adequate, the residual activity or persistance appears to be insufficient to satisfy the requirements of most quarantine use patterns (page 22).

Evaluation of potting soil toxicants:

A screening program to evaluate preplant granular insecticides for treatment of nursery potting soils indicated that none of the candidates under evaluation provided activity equivalent to Dursban FA-5 or chlordane (page 40).

Phytotoxicity of Dursban FA-5 to foliage plants:

Tests with a susceptible group of foliage plants indicated that adverse side effects were not produced when FA-5 was used at labelled rates. However, a 10X rate was phytotoxic to Begonias, Kalanchoes, and Impatiens (page 43).

Evaluation of pour-on treatments for certification of vegetable transplants:

Several insecticides and rates of application were evaluated as a pour-on treatment to prevent spread of the imported fire ant through shipment of bedding plants into non-infested areas. Dursban 4EC at 0.25 lbs. AI/100 gals H_2O was highly effective but did produce slight to moderate phytotoxic effects on some plant species (page 51).

Shelf life studies with Avermectin fire ant bait:

Bioassays of Avermectin fire ant baits stored either at room temperature or non-temperature controlled warehouse conditions indicated that pregelled defatted corn formulations remained highly acceptable for 8 months or longer. Some decrease in acceptance of corn cob grit formulations was noted (page 57).

Testing and development of alternate carriers for bait formulations:

Cob-fil ^{R}, a product very similar to Fur-Ag was evaluated as an inert carrier for bait formulations. Unprocessed cob-fil was repellent to foraging ants, but acceptance was greatly enhanced after either a sodium bicarbonate or ammonium hydroxide rinse. Cob-fil remains relatively dry and flowable after loading with 25 to 28% soybean oil (page 63).

Comparison of 3 AMDRO formulations for treatment of individual colonies:

Three formulations of AMDRO were evaluated for treatment of individual colonies. Neither of the two candidate formulations were as effective as the standard or commercial formulation.

Project Number: IFA 82-1

Project Title: Aerial application of bait toxicants

A. Fall 1981 Tests

I. INTRODUCTION:

EL-468 (Bant) is an experimental toxicant under development by Elanco Products Company. This compound has shown promise as an IFA bait toxicant in laboratory as well as field tests. The most efficacious formulation tested to date consists of 30% w/w soybean oil impregnated on pre-gelled defatted corn grits with .75% active ingedient. This formulation provided an average of 77% kill when applied at a bulk rate of 2.5 lbs/acre in a series of field trials conducted in the spring of 1981.

One of the problems associated with this compound is its tendency to cyclize to a more toxic metabolite which causes rapid and, therefore, undesirable kill of foraging worker ants. An "improved" formulation of EL-468 was prepared by Elanco in the fall of 1981. The new formulation differed from previous formulations primarily due to the use of anhydrous twice-refined soybean oil in an effort to stabilize the active ingredient of the formulated bait.

Additional field trials were needed to determine success of the formulation changes, to gain information on seasonal influence on efficacy (Fall vs. Spring applications), and to amass additional data on efficacy of the compound. The PPQ spray plane (Cessna Ag-Truck) equipped with an Elanco Meterate unit and Transland spreader was used to apply all treatments.

II. AIRCRAFT SPECIFICATIONS:

1. Cessna Ag-Truck
2. Delivery System
   a. Transland High Volume Spreader (Model 20160)
   b. Elanco Meterate[R] Unit.
3. 120 mph operating speed
4. 50' altitude
5. 50' working swath; 60' overall
6. Operated by Tim Roland, PPQ Pilot
7. Aircraft guidance and swath spacings were provided by flagmen.

III. BAIT FORMULATION SPECIFICATIONS:

Characteristics of the EL-468 formulation and Standard AMDRO were as follows:

Formulation	Carrier	% SBO	Avg. Bulk Density ($lbs/Ft.^3$)	% AI
EL-468	De-fatted corn	30	17.4	.75
AMDRO	De-fatted corn	30	20.5	.88

IV. DESCRIPTION OF TERRAIN TREATED AND LOCATION OF TEST SITES:

Experimental use permit 1471-EUP-73 concerning field testing of EL-468 restricts application to non-crop sites. Previous experience locating non-crop test sites for evaluation of IFA bait toxicants has shown that airport properties, if they are of sufficient size and are infested with ants, are suitable for this purpose.

The following airport properties were selected as test sites:

(1) Stennis Field- Bay St. Louis, Ms.
(2) Pinebelt Airport - Hattiesburg, Ms.
(3) Laurel Municipal Airport - Laurel, Ms.
(4) Hattiesburg Municipal Airport - Hattiesburg, Ms.
(5) Thompson Field - Jackson, Ms.
(6) Cordelle Municipal Airport, Cordelle, Ga.
(7) Thomasville Municipal Airport, Thomasville, Ga.

One or more rates of EL-468 were applied at each site. AMDRO Standard (1.0 lb. bulk formulation/acre) plus an untreated check was also included at each site.

Treatments applied, dates, acreage, etc. are summarized in Table 1 . No problems in equipment, calibration or application were encountered. All formulations were uniform, readily flowable, and without foreign debris or lumps.

V. PROCEDURES USED TO ACQUIRE EFFICACY DATA

A. Prior to treatment, fifteen 1/4-acre efficacy plots were established within each test plot. The center of each efficacy plot was marked with a wooden engineering stake. Diagramatic sketches (field maps) showing distances, relative position, etc. of each efficacy plot facilitated re-location of the center stake during subsequent post-treatment assessments.

B. While pivoting in a 58.9 foot radius around the center stake, a team of six trained observers searched each 1/4-acre plot for the presence of imported fire ant colonies. After locating a colony, the mound was opened with a spade and the types and relative

Table 1. Summary of Fall 1981 Aerial Treatments - Imported Fire Ant Station, APHIS, PPQ Gulfport, Ms.

Test Site Location	Block No.	Bait Formulation Applied	Date Applied	Desired Rate of APPL. (lbs/acre)	Actual Rate of Appl. (lbs/acre)	Total Acreage Treated
Stennis Field Bay St. Louis, Ms.	I	EL-468	10-27-81	1.25	1.24	50
	II	AMDRO	10-27-81	1.0	1.15	50
Pinebelt Airport Hattiesburg, Ms.	I	AMDRO	10-28-81	1.0	1.0	46
	II	EL-468	10-28-81	1.25	1.25	51
	III	EL-468	10-28-81	1.75	1.75	51
Laurel Municipal Airport, Laurel, Ms.	I	AMDRO	10-28-81	1.0	1.0	42
	II	EL-468	10-28-81	1.25	1.15	73
Hattiesburg Municipal Airport, Hattiesburg, Ms.	I	AMDRO	10-28-81	1.0	1.22	72
	III	EL-468	10-28-81	1.25	1.15	62
Thompson Field Jackson, Ms.	I	EL-468	10-29-81	1.25	1.25	97
	II	EL-468	10-29-81	1.75	1.75	97
	IV	AMDRO	10-29-81	1.0	1.0	50
Cordelle Municipal Airport, Cordelle, Ga.	I	EL-468	10-31=81	1.25	1.25	52
	II	EL-468	10-31-81	1.75	1.75	52
	III	AMDRO	10-31-81	1.0	1.0	53
Thomasville Municipal Airport, Thomasville, Ga.	I	EL-468	11-2-81	1.25	1.25	45
	II	EL-468	11-2-81	1.75	1.75	45
	III	AMDRO	11-2-81	1.0	1.C	63

abundance of life forms present observed. According to Banks, et. al (1980), presence of worker brood in an ant colony is strong evidence that the queen is present and the colony is normal. Williams, et. al. (1980) reported that AMDRO may cause death of the queen without total elimination of the worker force. Lofgren and Williams (1982) reported that Avermectin is a potent inhibitor of reproduction by imported fire ant queens. In theory, broodless colonies will eventually die unless the dead (or sterile) queen is replaced by adoption of another mated queen.

C. Two types of data were recorded for each sub plot examined:

(1) Total number of ant colonies present

(2) The relative size and types of colonies present.

This data was recorded prior to treatment and twice following treatment for each efficacy plot in each treatment block.

The classification system used to categorize colonies in the Fall 1981 test was as follows:

Estimated Worker Population	Status of Worker Brood	Colony Class
< 100	absent	1
100-1000	absent	2
1000-10,000	absent	3
10,000-50,000	absent	4
> 50,000	absent	5
< 100	present	6
100-1000	present	7
1000-10,000	present	8
10,000-50,000	present	9
> 50,000	present	10

The interaction of population density per unit area and colony class (or relative size) has been defined as the population index (Harlan et. al. 1981) and can be expressed mathematically by the following formula:

$$\text{Population Index} = \sum_{k=1}^{10} K(N)$$

Where N = the number of ant colonies in a given area comprised of colony classes having the value of K

Where ($10 \geq k \geq 1$). Colony classes are further defined above.

Colony mortality (% kill) was determined in the following manner:

$$100-\left(\frac{N_a}{N_p} \times 100\right)$$

Where Np = Number of colonies present prior to treatment and

Na = Number of colonies present after treatment.

VI. RESULTS

Results of this series of tests are shown in Table 2. Percent colony mortality ranged from 96% to 25.1% at an application rate of 1.25 lbs. of Bant per acre twenty-one weeks after application. Similar variability in control was also achieved at a rate of 1.75 lbs. Bant/acre (92% to 41.8% kill. The variation noted was not due to climatic conditions or malfunction of application equipment.

Table 2. Results of Fall 1981 Field Trials with EL-468 for Control of Imported Fire Ants -USDA, APHIS, PPQ, Imported Fire Ant Station Gulfport, Miss.

Test Site (Location)	TREATMENT: Bait Formulation	TREATMENT: Rate/Acre (lbs. Bulk)	COLONY MORTALITY 1/: X No. Colonies/Plot: Pre-treat	X No. Colonies/Plot: 12 Weeks Post Treat	X No. Colonies/Plot: 21 Weeks Post-Treat	X% Kill @ Indicated Post Treat Interval: 12 Weeks	X% Kill @ Indicated Post Treat Interval: 21 Weeks	POPULATION INDEX 1/: X % Change at Indicated Interval: 12 Weeks	X % Change at Indicated Interval: 21 Weeks
Stennis Field Bay St.Louis,Ms.	BANT	1.25	5.4	.4	.7	74.4	86.7	-84.8	-88.4
	AMDRO	1.0	4.5	0	.1	100	97.5	-100	-97.2
	Untreated Ck.	-	5.0	3.3	5.3	36.5	17.4	-32	+40.3
Hattiesburg, Ms. Munic. Airport	BANT	1.25	7.8	4.5	2.5	43.5	68.3	-76.2	-74.8
	AMDRO	1.0	5.2	.9	.5	80.7	89.2	-89.6	-91.7
	Untreated Ck.	-	6.1	5.4	6.4	16.3	17.2	-12.8	- 3.2
Pinebelt Airport Laurel, Ms.	BANT	1.25	6.0	3.7	4.4	36.7	30.0	-48.1	-40.8
	BANT	1.75	9.2	5.2	6.0	45.4	41.8	-51.2	-36.9
	AMDRO	1.0	5.6	2.2	3.8	62.1	35.5	-79.2	-54
	Untreated Ck.	-	5.3	5.2	7.7	17.3	0	+40	+30.7
Laurel, Ms. Munic.Airport	BANT	1.25	5.8	2.1	.9	61.0	82.6	-83.1	-89.7
	AMDRO	1.0	6.7	1.9	.9	70.7	87.5	-80.5	-90.8
	Untreated Ck.	-	5.2	3.8	4.8	25.3	19.5	-21.6	-11.0
Thompson Field Jackson, Ms.	BANT	1.25	11.7	6.8	9.1	52.3	25.1	-60.6	-23.9
	BANT	1.75	15.4	2.7	3.5	83.4	77.6	-89.5	-84.2
	AMDRO	1.0	8.1	1.3	2.6	81.6	68.6	-90.4	-78.8
	Untreated Ck.	-	17.7	17.7	33.4	9.4	0	-17.5	+131.0
Thomasville, Ga. Munic.Airport 2/	BANT	1.25	178	26	8	85	96	-93	-96
	BANT	1.75	177	33	15	81	92	-91	-93
	AMDRO	1.0	193	96	103	50	47	-52	-60
	Untreated Ck.	-	125	115	169	8	0	-3	+37
Cordelle,Ga. Munic.Airport 2/	BANT	1.25	114	49	34	57	70	-74	-86
	BANT	1.75	129	18	15	86	83	-88	-94
	AMDRO	1.0	144	13	23	91	84	-92	-89
	Untreated Ck.	-	109	860	820	21	25	-19	-23

1/ Based on ten 1/4 Acre plots/treatment unless otherwise noted.
2/ Efficacy based on a single large count area/treatment rather than ten 1/4-acre subplots.
Tesults furnished by Elanco.

B. Spring 1982 Tests

I. Introduction

MK-936 (Avermectin), a natural product derived from Streptomyces avermitilis, is being developed as a fire ant toxicant by Merck and Company, Inc. Lofgren and Williams (1982) evaluated Avermectin B_{1a} the laboratory and in small plot field tests and found it to be a highly potent inhibitor of reproduction by IFA queens. MK-936 is delivered to fire ant colonies via the conventional baiting system, e.g. the toxicant is dissolved into a feeding attractant (soybean oil) which is then used to saturate an inert carrier such as pregelled defatted corn or corn cob grits.

Field trials were initiated by this laboratory in May 1982 to evaluate four experimental formulations of MK-936 for control of the imported fire ant. All treatments were applied by a USDA-owned and operated Cessna spray plane equipped with a modified bait delivery system.

II. Aircraft Specifications:

1. Cessna Ag-truck
2. Delivery System
   A. Transland slim-line spreader
   B. Ram-air system installed in hopper to prevent bridging.
3. 120 mph operating speed
4. 50' altitude
5. 50' working swath; 60' overall
6. Operated by Tim Roland, USDA pilot

III. Guidance

Aircraft guidance and swath spacings were provided by flagmen.

IV. Treatments Applied and Bait Formulation Specifications

Four formulations of MK-936 in addition to the standard commercial formulation of AMDRO were evaluated. Characteristics of each formulation applied were as follows:

Formulation	Carrier	% SBO	Avg. Bulk Density (Lbs/Ft ^{3})	% Active Ingredient
MK-936	De-fatted corn	30	24.1	.011
MK-936	De-fatted corn	30	24.1	.0055
MK-936	Corn cob grits	25	33.1	.011
MK-936	Corn cob grits	25	33.1	.0055
AMDRO	De-fatted corn	30	18.1	88

V. Description of Terrain Treated and location of Test Sites:

MK-936 was applied under an experimental use permit (618-EUP-10) which restricted application to non-cropland not frequented by humans. Dannelly Field (Municipal Airport) at Montgomery, Alabama, was the first test site, while the Decatur County Airport at Bainbridge, Ga., served as the second site. At Montgomery, the AMDRO standard was applied to permanent grazed pastures adjacent to the airport property. The AMDRO plot at Bainbridge was located on airport property adjacent to the MK-936 plots.

Formulations applied, rates of application, acreage treated, etc. are summarized in Table 3. All formulations were of extremely high quality, very dry and flowable and totally without lumps or foreign debris.

Efficacy was determined by procedures described above except the classification system described by Lofgren and Williams (1982) was used to categorize all colonies:

Estimated Worker Population	Status of Worker Brood	Colony Class
< 100	absent	1
100-1000	absent	2
1000-10,000	absent	3
10,000-50,000	absent	4
> 50,000	absent	5
< 100	present	5
100-1000	present	10
1000-10,000	present	15
10,000-50,000	present	20
> 50,000	present	25

Table 3. Summary of Spring 1982 Aerial Applications with Avermectin Fire Ant Baits
Imported Fire Ant Station, USDA, APHIS, PPQ. Gulfport, Miss.

Test Site Location	Plot No.	Bait Formulation Applied	Date Applied	Desired Rate of Appl. (Lbs/Acre)	Actual Rate of Appl (Lbs/Acre)	Total Acres Treated
Montgomery, Ala.	I	MK-936 .011% on Defatted	5/11/82	1.0	1.18	62
"	II.	MK-936, .0055% on Defatted	5/11/82	1.0	1.23	68
"	III.	MK-936, .011% on corn cobs	5/11/82	1.0	1.26	63
"	IV.	MK-936, .0055% on corn cobs	5/11/82	1.0	1.00	74
"	V.	Untreated Ck.	-	-	-	-
"	VI.	AMDRO	5/11/82	1.0	1.15	325
Bainbridge, Ga.	I.	MK-936, .0055% on Defatted	5/12/82	1.0	.85	87
"	II.	MK-936 .011% on Defatted	5/12/82	1.0	1.08	87
"	III.	MK-936, .011% on corn cobs	5/12/82	1.0	1.25	82
"	IV.	MK-936, .011% on corn cobs	5/12/82	1.0	1.20	82
"	VI.	AMDRO	5/12/82	1.0	1.32	82
"	VII.	Untreated Ck.	-	-	—	-

VI. Results:

Colony mortality (% kill), population index changes, and percentage of surviving colonies with brood at each test site location are shown in Table 4 . Depending upon the Avermectin formulation applied, colony mortality at the Montgomery, Alabama site ranged from 21 to 57% six weeks after treatment.

Both defatted corn formulations of Avermectin were 100% effective in preventing reproduction as evidenced by the total lack of worker brood in any colony. Slightly better colony mortality was noted at the Bainbridge, Ga. site (41 to 72% kill with Avermectin and 82% with AMDRO). Defatted corn formulations were again 100% effective in eliminating reproduction.

The reduction in population index at both sites was far more dramatic and pronounced than was total colony mortality. Surviving colonies were predominantly class 4 or less regardless of Avermectin formulation applied. Large numbers of alates were observed in many surviving colonies at both test site locations. In many cases, large numbers of eggs were present; and were presumedly laid by these alates. Since unmated alates can produce only haploid eggs, which (if hatched) produce males, an extra burden (in the form of increased food demand by alates of both sexes) will be placed upon the already weakened colony.

Colony mortality continued to increase as indicated by the 12 week posttreatment assessment, with up to 87% mortality at the Montgomery, Alabama test site. In regards to treatments applied, greater differences were noted in the carrier rather than the rate of active ingredient .

Twenty-four weeks after treatment, reinfestation of most test plots had occurred as indicated by dramatic changes in the population index and percentages of surviving colonies with brood (Table 4).

Table 4. Results with Various Formulations of MK-936 (Avermectin) for Control of Imported Fire Ants, Spring 1982. Imported Fire Ant Station, USDA, APHIS, PPQ, Gulfport, Miss.

Test Site Location	TREATMENTS APPLIED Bait Formulation: Toxicant	Carrier 1/	%AI	Rate/Acre: Bulk (lbs)	AI (Mg.)	Pretreatment Population 2/: $\bar{X}$ No. Colonies/Subplot	$\bar{X}$ Pop. Index 3/ Subplot	Status of Population at Indicated Post treatment Intervals (Weeks) 2/: $\bar{X}$ % Colony Mortality 6	12	24	$\bar{X}$ % Change in Pop. Index 3/ 6	12	24	% Surviving Colonies with Brood 6	12	24
Montgomery, Ala	MK-936	PGD	.011	1.18	58.9	6.8	152	53	87	27	-93	-98	-58	0	0	91
"	"	"	.0055	1.23	30.7	5.3	96	57	87	32	-94	-96	-46	0	16	97
"	"	CCG	.011	1.26	62.9	10.2	216	21	48	12	-77	-55	8	28	84	87
"	"	"	.0055	1.00	24.9	6.7	124	50	59	17	-54	-61	29	88	88	95
"	AMDRO	PGD	.88	1.15	4594	8.0	177	59	55	14	-82	-81	25	42	48	98
"	Untreated Check			-	-	8.9	161	20	39	23	-20	-45	6	98	93	95
Bainbridge, Ga.	MK-936	PGD	.011	1.0	49.9	8.9	126	72	66	69	-95	-92	-74	0	13	100
"	"	"	.0055	.87	21.7	6.7	116	41	45	55	-88	-88	-63	0	15	88
"	"	CCG	.011	1.20	59.9	6.6	111	45	56	71	-88	-84	-77	12	31	93
"	"	"	.0055	1.25	31.2	7.5	119	41	21	44	-75	-41	-52	33	49	90
"	AMDRO	PGD	.88	1.20	4794	8.9	146	82	94	90	-91	-97	-91	18	60	92
"	Untreated Check			-	-	6.9	124	41	29	7	-45	-25	9	85	96	99

1/ PGD = Pregelled defatted Corn; CCG = Corn cob grits.

2/ Population Paremeters based on evaluation conducted in 15 1/4=acre subplots within each treatment block.

3/ Population index based on Lofgren scale (Lofgren and Williams 1982. Jour. Econ. Ent. 75: 798-803).

C. Fall 1982 Tests:

I. Introduction:

Aerial application of palatable bait formulations containing a feeding attractant, an inert carrier, and a slow-acting toxicant remains the most cost-effective approach to control of imported fire ants. Until cancellation of registration in 1977, mirex bait was used extensively for this purpose. AMDRO (formerly American Cyanamid AC-217,300) was granted conditional registration for use on pastures and non-cropland in August 1980. Recent advances in the testing and development of other toxicants justified large-scale field trials with several compounds in the Fall of 1982. All treatments were applied by a USDA-owned and operated Cessna spray plane equipped with a modified bait deliverly system. Details of the application phase of these field trials are described here.

II. Aircraft Specifications:

1. 1977 Cessna Ag-Truck
2. Delivery System
   A. Transland slim-line spreader (Model 20241)
   B. Ram-air system installed in hopper to prevent bridging.
3. 120 mph operating speed.
4. 50' Altitude
5. 50' working swath
6. Operated by Tim Roland, USDA Pilot

III. Guidance:

Aircraft guidance and swath spacings were provided by flagmen who were in radio contact with the aircraft.

IV. Treatments Applied and Bait Formulation Specifications:

Bant (formerly EL-468) is an experimental toxicant under development by Elanco. This compound has demonstrated promise in previous field trials, and several formulation changes were recently made in order to improve performance.

One formulation of Bant was applied at each test site location. Avermectin (MK-936), a natural product derived from Streptomyces avermitilis, is being developed as a fire ant toxicant by Merck and Company. Four formulations of MK-936 were applied at the Victoria, Texas test site whereas two formulations were applied at Dothan, Alabama and Cordelle, Georgia. Ferriamicide is manufactured by the Mississippi Authority for Control of Fire Ants (MACFA) and was granted a Section 18 Exemption of FIFRA on September 30, 1982, for use in Texas, Arkansas, and Mississippi. One formulation of Ferriamicide was applied at the Victoria, Texas site. Ferriamicide was not applied at other sites in compliance with the restrictions given in the Specific Exemption. Physical characteristics of each formulation applied were as follows:

Toxicant	Manufacturer	Inert Carrier 1/	% Oil	Avg. Bulk Density (lbs/Ft^3)	% AI
BANT	Elanco	PGDC	30	16.1	0.75
Avermectin	Merck & Co.	PGDC	30	21.4	0.011
"	"	PGDC	30	20.3	0.0055
"	"	ECG	20	30.6	0.011
"	"	CCG	15	33.3	0.011
Ferriamicide	MACFA	CCG	15	38.1	0.05
AMDRO	American Cyanamid	PGDC	30	18.1	0.88

1/ PGDC = Pregelled Defatted corn; ECG = Expanded cob grits; CCG = corn cob grits.

V. Description of Test Sites:

Both Avermectin and Bant were applied under Experimental Use Permits (618-EUP-10 and 1471-EUP-73 respectively) which restricted bait application to non-cropland. Test sites were chosen on the basis of relative ant populations, height of vegetation, absence of domestic animals and exclusion of entry by humans. After on-site inspections of several possible locations, the following sites were selected:

(1) Regional Airport, Victoria, Texas
(2) Napier Field (Municipal Airport) at Dothan, Alabama
(3) Municipal Airport at Cordelle, Georgia
(4) Stennis Field at Bay St. Louis, Mississippi.

In addition to the above criteria, women of child-bearing age were excluded from the application team.

Although these airport properties meet all restrictions given in the Experimental Use Permits (or Specific Exemption), it should be emphasized that fire ant populations in such areas are typically very light in relation to that normally present under average conditions (i.e. grazed pasture land or other prime habitat).

VI. Details of Treatment:

Listed here in chronological order are details concerning the application of each treatment under evaluation in this series of tests.

A. Victoria, Texas:

10/13/82 - A series of calibration flights (14) were performed in order to select the appropriate orifice plate for each formulation. Final selection of orifice sizes, swath width and operating speed for each bait formulation was as follows:

Formulation	Orifice Plates (inches)	Working Swath (feet)	Operating speed (mph)	Output (lbs/min)
AMDRO	31/64	50	120	11.5
Bant	37/64	50	120	14.6
MK-936 (.011% ECG)	5/16	35	115	8.5
MK-936 (.011% CCG)	5/16	45	115	10.8
MK-936 (.011% PGDC)	31/64	50	120	12.0
MK-936 (.0055% PGDC)	1/2	30	120	12.0

Treatment of Block I with AMDRO began at 6:30 p.m. and was completed at 7:00 p.m. Air temp. was 73°F, Soil temp. 68°F. Winds N.E. at 5-10 mph, skies clear. Rate of application was 1.0 lb. per acre.

10/14/82 -Treatment delayed until 11:00 a.m. because of extremely heavy dew and wet foliage.

Treatment of Block II with Bant was initiated at 11:10 a.m. Soil temp. 70°F, Air temp. 73°F, wind N.E. 0-8 mph. Bright sunny and clear. Treatment of Block III with MK-936 (.011% ECG) began at 12:00. MK-936 (.011% CCG) was applied to Block IV. Prior to treatment of Block VI with MK-936 (.011% PGDC) the bait was screened to remove large particles (some particles were approximately 1/2" in diameter). Particles of this size are capable of clogging the orifice plates. All MK-936 formulated on pregelled defatted corn was screened prior to loading into the aircraft. Block V received MK-936 (.0055% PGDC) at 1.2 lbs. per acre. Ferriamicide was applied to Block VII at 0.8 lb/acre.

B. Dothan, Alabama

10/19/82 - Sunny, cool and windy (up to 15 knots). Treatment delayed until 2:45 p.m. due to wind. Air temp at 3:00 p.m. was 80°F, soil 68°F. Wind 80° at 5 to 11 knots, decreasing in late hrs. AMDRO was applied to Block IV at 1.0 lb/acre. Bant was applied to Block III at 1.2 lbs/acre. Blocks I and II received MK-936 (.011% PGDC) and (.0055% PGDC), respectively.

C. Cordelle, Ga.

10/20/82 - Bright, sunny and clear. Air temp. 86°F, Soil 85°F. Wind 90° at 5 to 8 mph. Began treatment at 12:30 p.m. Block I was treated with Bant at 1.5 lbs/acre. Blocks II and III received MK-936 (.0055% PGDC) and (.011% PGDC) respectively. AMDRO was applied to Block IV.

D. Stennis Field, Bay St. Louis. Ms.

10/26/82 - Bright, sunny and clear. Air temp. 72°F. Wind from N at 0-5 mph Began treatment 10:00 A.M. Bant was applied to Block I at 1.3 lbs/acre.

VII. Summary:

Formulations applied, rates and dates of application, acreage treated, etc. summarized in Table 5. With the exception of MK-936 formulated on pre-gelled defatted corn, all formulations were of good quality, very dry and flowable, and without lumps or foreign debris. Preliminary efficacy data was collected 6 weeks following treatment. A final evaluation will be made in the Spring of 1982 (approximately 5 months after treatment).

VIII. Results:

Preliminary results of this test appear in Table 6. Colony mortality provided by each treatment was less than expected, but a significant decrease in population index was achieved in most cases. The most effective treatment in terms of colony mortality was ferriamicide which provided 74% colony mortality with a reduction of 84% in the population index. The effectiveness of Avermectin as an inhibitor of reproduction was again demonstrated by the absence of brood production by most surviving colonies.

Since these treatments were applied in mid October, performance of most treatments is expected to improve over the winter months and will be evident in subsequent counts. A second post-treatment assessment is scheduled for March 1983 with a third and final evaluation in June.

Table 5. Summary of Fall 1982 Field Trials with IFA Bait Toxicants
Imported Fire Ant Station, USDA, APHIS, PPQ, Gulfport, Ms.

Test Site Location	Plot No.	Bait Formulation 1/ Applied	Date Applied	Desired Rate of Application (Lbs/Acre)	Actual Rate of Application		Total Acres Treated
					Bulk(lbs)	AI(grams)	
Victoria, Tx.	I	AMDRO (.88% PGDC)	10/13/82	1.0	1.0	4.0	105
	II	Bant (.75% PGDC)	10/14/82	1.25	1.4	4.8	108
	III	MK-936 (.011% ECG)	10/14/82	1.0	1.2	.060	111
	IV	MK-936 (.011% CCG)	10/14/82	1.0	1.3	.065	111
	V	MK-936 (.0055% PGDC)	10/14/82	1.0	1.2	.030	146
	VI	MK-936 (.011% PGDC)	10/14/82	1.0	.9	.045	278
	VII	Ferriamicide (.05% CCG)	10/14/82	1.0	.8	.181	96
Dothan, Al.	I	MK-936 (.011% PGDC)	10/19/82	1.0	1.1	.055	68
	II	MK-936 (.0055% PGDC)	10/19/82	1.0	1.2	.030	67
	III	Bant (.75% PGDC)	10/19/82	1.25	1.2	4.0	113
	IV	AMDRO (.88% PGDC)	10/19/82	1.0	1.0	4.0	98
Cordelle, Ga.	I	Bant (.75% PGDC)	10/20/82	1.25	1.5	5.1	106
	II	MK-936 (.0055% PGDC)	10/20/82	1.0	1.1	.027	118
	III	MK-936 (.011% PGDC)	10/20/82	1.0	1.2	.060	103
	IV	AMDRO (.88% PGDC)	10/20/82	1.0	1.0	4.0	84
Bay St. Louis,Ms.	I	Bant (.75% PGDC)	10/26/82	1.25	1.3	4.4	200

1/ PGDC = Pregelled defatted corn; ECG = Expanded cob grits; CCG = Corn cob grits.

Table 6. Preliminary Results of Fall 1982 Field Trials with IFA Bait Toxicants, Imported Fire Ant Station, USDA, APHIS, PPQ Gulfport, Miss.

Test Site Location	TREATMENTS APPLIED: Bait Formulation: Toxicant	Carrier 1/	%AI	Rate/Acre: Bulk (lbs)	AI (Mg)	PRETREATMENT POPULATION 2/: $\bar{X}$ No. Colonies Per Subplot	$\bar{X}$ Pop. Index 3/ Per Subplot	STATUS OF POPULATION 6 WKS. AFTER TREATMENT 2/: $\bar{X}$ % Colony Mortality	$\bar{X}$ % Change in Pop. Index 3/	% Surviving Colonies with Brood
Victoria, Tx.	Amdro	PGDC	.88	1.0	4000	8.1	144	36 ± 32	-65 ± 37	23
	Bant	PGDC	.75	1.4	4800	6.9	113	27 ± 30	-78 ± 13	14
	MK-936	ECG	.011	1.2	60	6.6	115	14 ± 20	-75 ± 17	12
	MK-936	CCG	.011	1.3	65	6.7	124	18 ± 23	-70 ± 81	19
	MK-936	PGDC	.0055	1.2	30	6.9	125	16 ± 22	-76 ± 14	9.0
	MK-936	PGDC	.011	.9	45	6.9	125	21 ± 25	-78 ± 20	2.0
	Ferriamicide	CCG	.05	.8	181	7.0	113	74 ± 29	-84 ± 22	55
	Untreated Check	-	-	-	-	5.4	94	9 ± 16	+10 ± 61	57
Dothan, Al.	Amdro	PGDC	.88	1.0	4000	4.3	83	50 ± 34	-81 ± 23	32
	Bant	PGDC	.75	1.2	4000	6.6	117	13 ± 19	+34 ± 134	92
	MK-936	PGDC	.011	1.1	55	8.2	133	9 ± 20	-75 ± 11	0.5
	MK-936	PGDC	.0055	1.2	30	13.5	209	18 ± 27	-67 ± 29	5.0
	Untreated Check	-	-	-	-	4.3	82	5 ± 14	+29 ± 33	92
Cordelle, Ga.	Amdro	PGDC	.88	1.0	4000	7.7	164	39 ± 21	-79 ± 14	36
	Bant	PGDC	.75	1.5	5100	7.3	125	13 ± 17	+ 2 ± 38	80
	MK-936	PGDC	.0055	1.1	27	5.2	91	28 ± 28	-83 ± 7	3.6
	MK-936	PGDC	.011	1.2	60	6.6	136	16 ± 19	-83 ± 6	0
	Untreated check	-	-	-	-	9.4	194	0 ± 0	+13 ± 24	90

1/ PGDC = Pregelled defatted corn; ECG = Expanded cob grit; CCG = corn cob grit.
2/ Population parameters based on evaluations conducted in 15 1/4-acre subplots within each treatment block.
3/ Population index based on Lofgren scale (Lofgren and Williams, 1982 - Jour Econ. Ent 75:798-803)

References Cited

Banks, W. A., H. L. Collins, D. F. Williams, C. E. Stringer, C. S. Lofgren, D. P. Harlan and C. L. Mangum. 1981. Field trials with AC-217, 300 a new amidinohydrozone bait toxicant for control of the red imported fire ant. Southwestern Entomologist. 6(2): 158-164.

Williams, D. F., C. S. Lofgren, W. A. Banks, C. E. Stringer and J. R. Plumley. 1980. Laboratory studies with nine amidinohydrozones, a promising new class of bait toxicants for control of red imported fire ants. J. Econ. Ent. 73(6):798-802.

Harlan, Donald P., W. A. Banks, H. L. Collins, and C. E. Stringer. 1981. Large area tests of AC-217,300 bait for control of imported fire ants in Alabama, Louisiana and Texas. Southwestern Entomologist 6(2): 150-157.

Lofgren, C. S. and D. F. Williams, 1982. Avermectin B_1a, a highly potent inhibitor of reproduction by queens of the red imported fire ant. Jour. Econ. Ent. 75: 798-803.

Project Number: IFA 82-2-A

Project Title: Evaluation of Lindane for IFA Quarantine Treatments

I. Introduction

Commercial shipments of ornamental nursery plants and grass sod were associated with accidental introduction of imported fire ants into previously non-infested areas as early as 1953 (Culpepper 1953). Federal Quarantine 30 81, involked May 6, 1958, was designed to prevent artificial spread of the imported fire ant by regulating the movement of items capable of harboring incipient infestations of the ant. Preventative or prophylatic treatments with long residual insecticides such as dieldrin, heptachlor and chlordane were highly cost effective and successfully used from 1958 until December 31, 1979 when the final cancellation order concerning the use of chlordane became effective. Research and development of alternate treatments has been a high priority goal of the Imported Fire Ant Station for several years.

Lindane was evaluated for fire ant control prior to the tests described here (Lyle and Fortune 1948, Eden and Arant 1949), but those early use patterns differed greatly from the particular requirements of quarantine treatments. In addition to initial toxicity, one of the foremost requirements of an effective quarantine treatment is residual activity. Since lindane demonstrates residual activity similar to other chlorinated hydrocarbon insecticides (Ulmann 1972), special consideration was given to its potential for a broad spectrum treatment of potting soils, grass sod and balled and burlapped plants. Results of a series of laboratory and field tests with this compound are presented here.

II. Toxicity of Lindane to Imported Fire Ant Workers:

Procedures described by Banks et al (1964) were slightly modified and used to determine initial toxicity of lindane to the imported fire ant. Serial dilutions of technical lindane in acetone were used to treat 50 gram batches of soil (sandy loam top soil pH6.5) with dosages ranging from .5 to .009 ppm. Each dose rate was tested 3 times on different days with 3 replications per test. Each replicate consisted of 20 worker ants confined to treated soil which was placed in 2" x 2" plastic flower pots equipped with a Labstone[R] bottom. The Labstone absorbed moisture from an underlying bed of damp peat moss while a Fluon[R] coating prevented the ants from escaping from the top of the open pots. Mortality was assessed at 24 hour intervals for 72 hours.

Results of these tests indicate that lindane is moderately toxic to imported fire ant workers (Figure 1). An LD_{99} (72 hours continuous exposure) was determined to be approximately 0.35 ppm.

III. Potting Soil Tests:

See page 40 for a discussion of results of potting soil tests.

IV. Root Dip Treatments for Balled and Burlapped Nursery Stock:

Surface applications of granular chlordane were used to certify movement of field-grown ornamental plants when shipped in a "balled and burlapped" condition prior to the cancellation of this use by EPA, March 7, 1978. A root dip treatment (total immersion of the root ball) with a Dursban solution was developed by this laboratory in 1979 and subsequently adopted for program use (PPQ Treatment Manual 805-25.2230).

Although dip treatments are not favored by growers or by PPQ line personnell responsible for enforcement of the imported fire ant quarantine, (due to the cost and labor required), this procedure does provide a stop-gap measure to certify movement of B & B plants until more acceptable procedures can be devised.

Various rates of lindane 20EC (Kill-KO Brand, formulated by Rigo Company, Buckner, Kentucky) were evaluated by the following procedure:

FIGURE 1. TOXICITY OF LINDANE TO IFA WORKERS

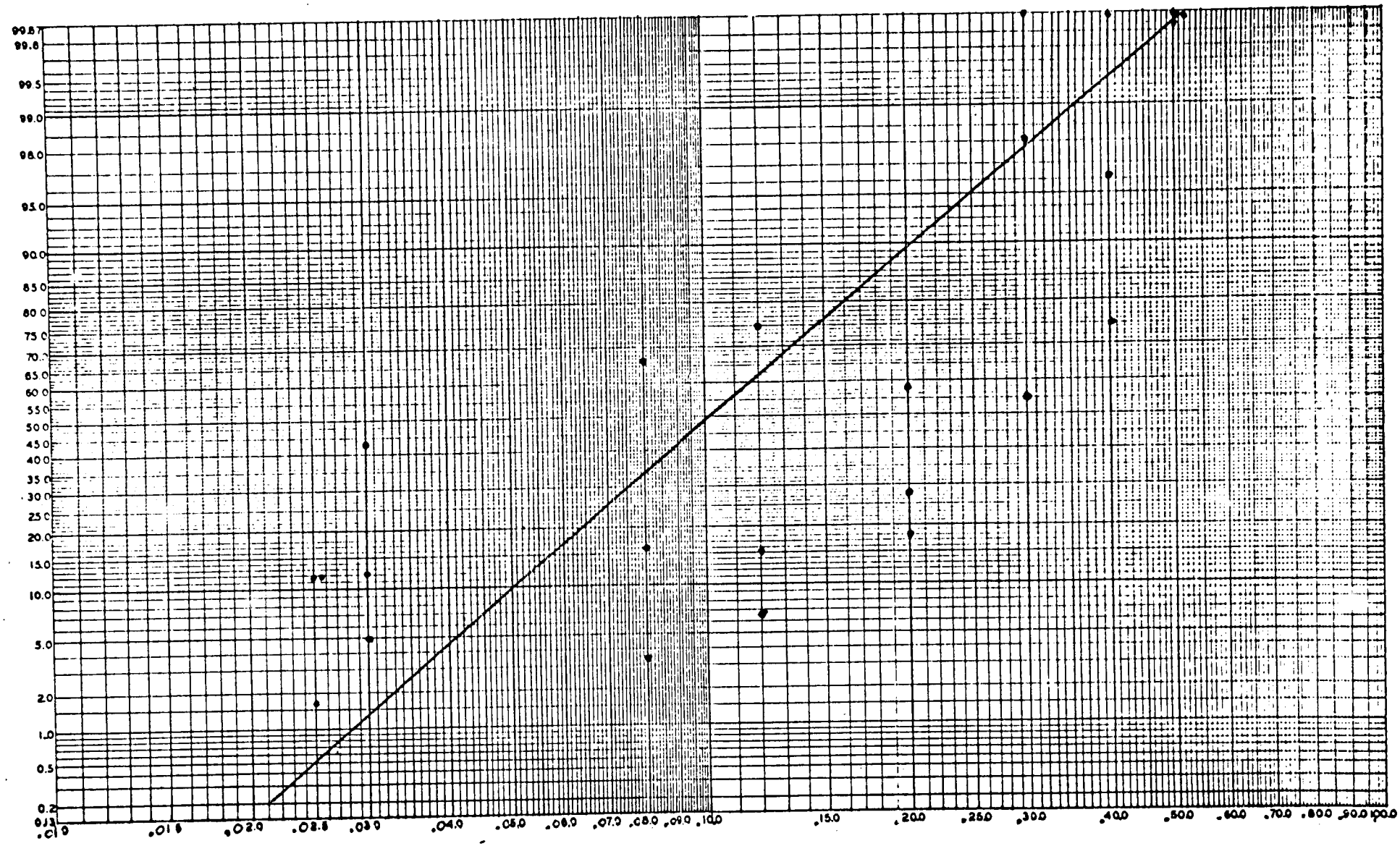

Balled and burlapped plants were divided into groups of three plants per treatment and the root balls of each plant totally immersed into candidate insecticide solutions. The immersion was continued until bubbling ceased, indicating that total saturation of the root ball had occurred. The plants were then removed from the lindane solution and allowed to drain overnight prior to initiation of the bioassay. After all treatments were completed, the burlap liners were removed from each plant and 1¼" diameter soil cores removed from six different sites equally spaced along the circumference of each ball. The cores extended from the periphery of the ball to the center of the ball. Standard clean-up procedures (acetone rinses, etc.) were strictly adhered to in order to prevent contamination of cores from different balls. Standard laboratory bioassays utilizing alate queens were conducted on composited core samples from each treatment series: 20 cc of soil were placed into each of 4 three-inch plastic flower pots which were fitted with plaster of paris bottoms. A fluon coating applied to the sides of the pot prevented the ants from escaping. Five alate queens were then placed into each flower pot (test chamber). Use of alate queens simulates infestation of the ball by a newly mated gravid queen. It is assumed that a newly mated gravid queen represents the greatest pest risk associated with shipment of B & B plants since there is little likelihood that nursery workers would dig, process, and transport a plant ball infested with a mature and aggressive imported fire ant colony.

Mortality counts were made 1, 2, 3 and 4 days after the alates were confined to the composited core increments. In order to compensate for natural mortality, an untreated check series (negative control) was evaluated simultaneously. Soil for the untreated check series was collected from a plant ball which had been dipped in plain water. Treated plants were maintained outdoors under natural conditions until bioassays were conducted at monthly intervals following treatment in order to determine residual activity of each treatment.

As shown in Table 7 all treatments were highly effective for two months following treatment, and the highest rate (1.2 mls 20% EC/gallon H_2O) was effective for three months.

Table 7 . Root dip Treatments with Lindane 20%EC for Balled and Burlapped Plants.

Mls. Lindane 20% EC/gallon Water	% Mortality of Alate Queens Exposed for 4 Days to Soil Collected from Immersed Root Balls at the Indicated Post-treatment Interval 1/			
	48 hrs.	1 month	2 months	3 months
1.2	100	100	100	100
.6	100	100	100	20
.3	100	100	100	25
.15	100	65	100	45
Untreated check	5	5	5	15

1/ Composited soil samples from 3 plants/treatment were divided into 4 replicates with 5 alate queens/replicate. Mortality of queens was assessed after 4 days continuous exposure.

V. Field Tests to Determine Optimum Dose Rate and Residual Activity on Grass Sod

A. Control of Mature Colonies:

1. Single treatment; incorporation vs. Surface Application

On March 4, 1982 a field test to evaluate various rates of lindane 5G (formulated by Woolfolk Chemicals) applied as broadcast surface treatments was initiated. All treatments were applied by a Gandy Model 605 granular applicator. Immediately after treatment, some test plots were disked in two directions in order to mix and incorporate the lindane granules to a depth of 4 to 5 inches. Surface treated (non-incorporated) plots were left undisturbed. Population assessments were conducted prior to treatment and at various intervals for 24 weeks after treatment in accordance with procedures described by Harlan et al (1981).

Results of these tests are shown in Table 8. Incorporated treatments at relatively high rates of application (7.6 and 9.5 lbs. AI/acre) provided 100% control 12 weeks following application. However, reinfestation by summer mating flights greatly diminished control on all plots by 24 weeks after application.

2. Dual treatment with AMDRO

Control of mature colonies following application of residual toxicants occurs over an extended period of time (usually months) through depletion of the worker force, culminating with starvation of the queen. A dual treatment strategy whereby an AMDRO treatment followed by a lindane treatment was evaluated. Rationale for the dual treatment approach was that AMDRO would eliminate most of the large mature colonies in a relatively short time while lindane would further weaken (or kill) colonies which survived the AMDRO

Table 8. Evaluation of Lindane 5G Applied Broadcast Surface and Broadcast Incorporated for Control of Mature Colonies in Grass Sod.

Type Treatment and Rate of Appl. (Lbs AI/Acre)		Pretreatment Population 1/		% Kill at Indicated Weeks after Treatment				% Change in Pre-treatment Population Index at Indicated Weeks after Treatment			
		No Colonies/ Plot	Population Index	5	12	18	24	5	12	18	24
Test Series I 3/4/82											
Incorporated	1.98	4	24	0	0	0	0	+345	-61	+216	+220
Incorporated	2.45	4	30	0	0	0	25	+173	+246	+246	- 24
Incorporated	4.28	8	56	38	63	50	63	-34	-61	- 50	- 66
Incorporated	7.65	5	38	60	100	40	20	-63	-100	- 42	- 34
Incorporated	9.47	8	53	33	100	88	88	-28	-100	- 85	- 87
Surface	1.11	16	129	0	0	0	25	+128	- 19	+ 22	- 31
Surface	2.13	13	103	24	77	70	54	-25	- 88	- 69	- 66
Surface	2.70	5	38	80	100	80	100	-79	-100	- 82	-100
Surface	5.45	19	159	37	72	79	79	-36	- 81	- 81	- 81
Surface	7.65	19	153	11	79	90	84	-18	- 82	- 91	- 86
Surface	9.5	11	88	9	64	73	73	-17	- 73	- 73	- 75
Untreated Ck (incorporated)		2	14	0	0	0	0	+328	+150	+535	+200
Untreated Ck (surface)		9	77	0	0	12	45	+193	+168	- 21	- 53
Test Series II 4/20/82											
Surface	5.45	21	157	76	95	-	0	-86	- 96	-	+ 88
Surface	9.65	19	152	74	90	-	0	-80	- 91	-	+ 37
Untreated Ck	-	24	205	46	71	-	0	-48	- 73	-	+ 24

treatment as well as prevent reinfestation of the treated area by newly mated queens. AMDRO was applied as a broadcast treatment with a modified Gandy applicator to one acre test plots on April 27, 1982, at a bulk rate of 1.5 lbs. bait per acre. Forty-eight hours later, lindane 5G was applied at 5 and 10 lbs. AI/Acre respectively. Population assessments were conducted prior to treatment and at 4 and 12 weeks after treatment.

As shown in Table 9 , both treatments were highly effective in eliminating mature colonies in existance at the time of application.

B. Residual Activity Against Newly Mated Queens

It is assumed that the greatest pest risk associated with shipment of grass sod is transport of newly mated queens that may be either on the sod surface or slightly below the surface in the initial brood chamber. This assumption is based on the fact that the likelihood of removing and shipping a mature queen is nil, since vibration from approaching harvest machinery would cause her to retreat deeply within the mound. Due to the difficulty in obtaining large numbers of newly mated queens, the more easily collected unmated queens (female alates) were utilized as the target pest in the tests reported here.

On June 8, 1982, a test to evaluate various rates of lindane 5G and 20% EC (1.65 lbs AI/gallon) was initiated. Both products were formulated by Woolfolk Chemicals, Ft. Valley, Georgia. Six rates of both formulations ranging from .5 to 8.0 lbs AI/Acre were applied to 10'x 50'test plots in centipede sod located on the Alboa grass farm near Gulfport, Miss.

EC formulations were applied with an FMC Model FG-1010 high pressure sprayer equipped with two flood jet nozzles with TK-553 tips spaced 5 feet apart on a horizontal spray boom which was mounted 1 foot above the ground. This arrangement produced a 10 foot swath. The spray rig was calibrated to deliver 43 gallons of finished spray per acre at 25 PSI. Granular formulations were applied with a Model 605 Gandy R applicator towed by a 1700 Ford

Table 9 . Evaluation of Dual Treatments with Lindane and AMDRO for Control of Mature Colonies in Turf.

Treatment	Pretreatment Population 1/		% Kill at indicated weeks after treatment		% Change in Pop. Index at indicated weeks after treatment	
	No. Colonies/Plot	Population Index	4	12	4	12
AMDRO @ 1.5 lbs/Acre ; 48 hrs later, Lindane 5G @ 5.0 lbs. AI/Acre.	28	213	97	93	-99.6	-97
AMDRO @ 1.5 lbs/Acre; 48 hrs. later, Lindane 5G @ 10.0 lbs. AI/Acre.	28	232	86	100	-94	-100
Untreated check.	6	49	0	50	+24	-49

1/ Population assessments based on one 1/4-acre circular count area within each 1-acre test plot.

tractor. Forty-eight hours following treatment, all test plots were irrigated with an overhead pulsating sprinkler irrigation system. After three hours of operation, the amount of water applied was recorded by 3 rain guages located at strategic locations among the test plots.

Residual activity of each treatment was determined in the following manner: A wheel-type soil sampler was used to collect and composite approximately 300 soil cores (.5" x 2.0") from each plot at monthly intervals for 3 months following treatment. Samples were passed through a 1/4" mesh sieve to remove grass, rizomes and other debris from the soil. Each composited soil sample was then frozen until it was bioassayed with alate queens and later subjected to GLC analysis by NMRL. Bioassays were conducted in the laboratory by confining alate queens to treated soil which was placed in 2" x 2" plastic flower pots equipped with a Labstone R bottom. The Labstone absorbed moisture from an underlying bed of damp peat moss, while a Fluon R coating prevented the ants from escaping from the top of the open pots. Each pot (replicate) contained 20 cc of treated soil and 5 alate queens. Queen mortality was assessed after 72 hours of continuous exposure to the treated soils.

Results of this test appear in Table 10 and indicate that no treatment could be considered effective in preventing reinfestation for longer than 1 month.

V. Phytotoxicity

In general, lindane is well tolerated by plants. Documented cases of phytotoxicity appear principally in connection with either overdosing or when the compound is applied at the time of transplanting when plants are in a state of reduced resistance (Ulmann 1972). However, several studies have shown that lindane can be detrimental to plants (Brooks and Anderson 1947, Starnes 1950, Way 1959).

Most of these studies involved plant material which is not regulated by the IFA quarantine (primarily vegetable crops, etc.). Therefore, it was deemed advisable to conduct a series of tests with representative plant species which are regulated.

Table 10 . Residual activity of various rates and formulations of Lindane applied to grass sod for control of IFA queens.

TREATMENT		$\bar{X}$ % Mortality of Alate Queens confined to treated soil collected at indicated post-treat interval 1/			
Form-ulation	Rate/Acre (lbs.AI)	1 week	1 month	2 months	3 months
5% Clay Granules	8.0	100	100	15	5
	6.0	100	100	10	10
	4.0	100	100	10	0
	2.0	100	55	5	0
	1.0	55	30	10	10
	.5	100	15	10	0
20% Emulsifiable Concentrate	8.0	100	20	10	0
	6.0	100	30	5	0
	4.0	100	20	15	10
	2.0	0	25	15	5
	1.0	10	35	20	5
	.5	5	25	0	5
Untreated check	-	0	0	5	0

1/ Mean based on 4 replicates of composited soil cores with 5 alate queens/replicate.

A. Effects on Foliage Plants Transplanted into Lindane Treated Potting Soil

Ten species of foliage plants were purchased from a local retail outlet and transplanted into 6" plastic pots containing lindane treated media. Lindane 6 WP was thoroughly blended into BACCTO R potting soil at a rate of 11.2 gms AI/yd^3 of potting soil. Ten plants (replicates) of the following species were transplanted from 3" pots to 6" pots containing treated soil on February 18,1982:

Common Name	Scientific Name
Begonias	*Begonia spp*
Bolivian Jew	*Tradescantia spp*
Jade	*Crassula argentea*
Nepthytis	*Syngonium spp*
Parlor Palm	*Chameadopea elegans*
Peperonia	*Peperonia spp*
Prayer Plant	*Maranta leuconeura*
Schefflera	*Brassaia actinophylla*
Spider plant	*Chlorophytum spp*
Swedish Ivy	*Plectranthus australis*

An identical group of the same species were also transplanted into 6" pots containing untreated potting soil. All plants were maintained in a greenhouse and subjected to normal agronomic practices. Phytotoxicity ratings were conducted 4 weeks after transplanting and thereafter at monthly intervals for 3 months at which time the test was terminated. The phytotoxicity rating scale used to rate the appearance of each plant was as follows:

(1) Plants healthy; not different from untreated check.

(2) Slight yellowing, wilting, marginal chlorosis or other mild symptoms.

(3) Symptoms more severe, some leaf drop.

(4) Severe stunting, abnormal leaf or stem structure.

(5) Dead.

As shown in Table 11, lindane 6 WP at 11.2 gms AI yd^3 of potting soil did not produce an adverse effect upon any plant specimen in this trial.

B. Root dip treatment for woody ornamentals:

One of three species of woody ornamentals evaluated (Andorra Juniper) was slightly yellowed by root dip treatments of lindane 20% EC at rates ranging

Table 11. Phytotoxicity Ratings for Various Species of Foliage Plants Grown in Lindane Treated Potting Media [1]

Plant	Rating at indicated interval after transplanting into treated media [2]			
	1 month	2 months	3 months	4 months
Jade	1	1	1	1
Common Begonia	1	1	1	1
Prayer Plant	1	1	1	1
Peperonia	1	1	1	1
Spider plant	1	1	1	1
Bolivian Jew	1	1	1	1
Swedish Ivy	1	1	1	1
Schefflera	1	1	1	1
Nepthytis	1	1	1	1

1/ Lindane 6WP incorporated into BACCTO[R] potting soil at a rate of 11.2 grams AI/yd^3 of media prior to transplanting plants.

2/ Rating scale: 1- healthy not different from untreated check. 2- Slight yellowing, wilting, marginal chlorosis or other mild symptoms, 3- Symptoms more severe, some leaf drop. 4- Severe stunting, abnormal leaf or stem structure 5- Dead.

from 1.2 to .15 ml 20% EC/gallon water (Table 12). Two other species were not affected.

C. Vegetable Transplants:

Vegetable seedlings or transplants grown within the quarantine area and shipped to markets outside this area continue to be regulated although the pest risk associated with this commodity seems minimal, particularly if the plants are grown within enclosed greenhouses.

Lindane 5G was thoroughly blended into potting soil (BACCTO ^{R}, produced by Michigan Peat Co., Houston, Texas) at a rate of 11.2 gms. AI/yd ^{3} of soil. The treated soil was placed into 2" x 2" x 2" peat pots, and the pots planted to the following vegetables:

Vegetable	Scientific Name	Variety
Broccoli	*Brassica oleracea*	"Green Sprouting"
Brussel Sprouts	*Brassica oleracea*	"Long Island"
Cabbage	*Brassica oleracea*	"Jersey Wakefield"
Collards	*Brassica oleracea*	"Vates"
Cucumber	*Cucumis sativus*	"Palomar"
Egg Plant	*Solanum melongonia*	"Black Beauty"
Hot Pepper	*Capsicum frutescens*	"Red cayenne"
Lettuce	*Lactuca sativa*	"Dark green Boston"
Squash	*Cucurbita pepo*	"Early Prolific"
Sweet Pepper	*Capsicum frutescens*	"California Wonder"
Tomato	*Lycoperscion esculentum*	"Better Boy"

A total of 10 pots (replicates) were planted to each vegetable listed with 3 seeds per pot. Ten pots containing untreated soil (untreated check) were also planted. The plants were maintained in a greenhouse, watered as needed, and subjected to normal agronomic practices. Emerged seedlings were thinned to one plant per pot after they reached the first true leaf stage. Percent germination of each vegetable was recorded. Plants were harvested and the standing biomass determined by weight when the untreated check of a given variety reached market size. This test was replicated three times; planting dates were Feb. 2, 1982 (Test 1), March 3, 1982 (Test 2), and May 24, 1982 (Test 3). The results of these tests are shown in Table 13.

Table 12. Phytotoxicity ratings for 3 species of balled and burlapped woody ornamentals immersed in various concentrations of lindane 20% EC.

Plant Variety	Dosage and Phytotoxicity Rating 60 Days After Treatment 1/			
	1.2 ML 20EC/ gallon	.6 ml 20EC/ gallon	.3 ml 20 EC/ gallon	.15 ml 20 EC/ gallon
ANDORRA JUNIPER (*Juniperus horizontalis* var. *Plumosa*	2	2	2	2
San Jose Osmanthus (*Osmanthus spp*)	1	1	1	1
Holley (*ILEX spp* var. Nellie R. Stevens)	1	1	1	1

1/ Rating scale: 1 - healthy; not different from check plants. 2 - slight yellowing, wilting or other mild symptoms. 3 - Symptoms more severe, some leaf drop. 4 - Severe stunting, abnormal leaf or stem structure. 5 - Dead.

Table 13. Germination, Growth and Development of Vegetable Seedlings in Lindane Treated Potting Soil

Vegetable & Variety	Non-Treated Soil								Lindane Treated Soil (6 WP at 11.2 gms. AI/yd^3)							
	% Germination				Standing Biomass at Harvest (Grams)				% Germination				Standing Biomass at Harvest (Grams)			
	Test 1	Test 2	Test 3	$\bar{X}$	Test 1	Test 2	Test 3	$\bar{X}$	Test 1	Test 2	Test 3	$\bar{X}$	Test 1	Test 2	Test 3	$\bar{X}$
Bell Pepper "Calif Wonder"	87	97	83	89	.86	.21	.41	.49	100	90	97	86	.15	.20	.49	.28
Broccoli "Calabrese"	94	97	97	96	1.45	.60	1.27	1.10	100	100	100	100	.65	.43	1.0	.69
Brussel Sprouts "Long Island"	63	80	27	57	.74	.23	.89	.62	53	70	53	59	.32	.23	.75	.43
Collards "Vates"	63	70	53	62	.73	.26	.57	.52	83	80	57	73	.29	.26	.58	.37
Cabbage "Jersey Wakefield"	100	94	90	95	1.73	.84	1.36	1.31	100	80	94	91	.52	1.00	.96	.85
Cucumber "Palomar"	97	97	100	98	2.24	1.10	1.58	1.64	97	100	100	99	1.21	1.14	1.40	1.25
Egg Plant "Black Beauty"	60	84	73	72	.76	.20	.92	.62	77	90	97	88	.33	.20	.60	.37
Hot Pepper "Red cayenne"	97	90	90	92	1.09	.15	.69	.64	100	90	97	96	.15	.20	.49	.28
Lettuce "Dark Green Boston"	100	70	17	62	.78	.21	.51	.50	100	95	0	65	.17	.20	-	.12
Squash "Early Prolific"	90	97	100	96	2.56	1.30	2.35	2.07	90	100	97	96	1.47	1.35	2.53	1.78
Tomato "Better Boy"	100	87	97	95	2.18	.77	1.78	1.57	90	100	78	89	.26	.71	1.11	.70

Lindane demonstrated no apparent effect on the percent germination of most vegetables, but did dramatically delay germination. Due to this delay, plants grown in treated media were much smaller in size as determined by the standing biomass at harvest (overall average of 41% smaller) than those grown in untreated media. Since this reduction in size would adversely impact the economic value of a crop, lindane 6WP applied preplant incorporated should not be used as a certification procedure for vegetable seedlings. Similar results were noted when vegetable seedlings were grown in Dursban or AMAZE treated potting soil (Collins 1981).

REFERENCES CITED

1. Banks, W.A., C.S. Lofgren, and C. E. Stringer, Jr. 1964. Laboratory Evaluation of Certain Chlorinated hydrocarbon insecticides against the imported fire ant. Jour. Econ. Ent. 57:298-299.

2. Brooks. James W. and Lauren D. Anderson. 1947. Toxicity Tests of Some New Insecticides through the Root System of Plants. Jour. Econ. Ent. 43:338-348.

3. Collins, H. L., 1981. Laboratory Report for USDA, APHIS, PPQ, Imported Fire Ant Station. 10/1/80 - 12/31/81.

4. Culpepper, G. H. 1953. Status of the Imported Fire Ant in the Southern States in July 1953. U.S.Dept. Agr. Res. Serv. #867. 8pp.

5. Eden, W. G. and F. J. Arant. 1949. Control of the Imported Fire Ant in Alabama. Jour. Econ. Ent. 42:976-979.

6. Harlan, Donald P., W. A. Banks, H. L. Collins and C. E. Stringer, 1981. Large Area Tests of AC-217,300 Bait for Control of Imported Fire Ants in Alabama, Louisiana and Texas. Southwestern Entomologist 6:150-151.

7. Lyle, Clay and Irma Fortune. 1949. Notes on an Imported Fire Ant.Jour. Econ. Ent. 41:833-834.

8. Starnes, Ordway. 1950. Absorption and Translocation of Insecticides through the Root System of Plants. Jour. Econ. Ent. 43:338-342

9. Ulmann, E. 1972. Lindane, Monograph of an Insecticide. Verlag K. Schillinger, Freiburg i. Br. Federal Republic of Germany. 384pp.

10. Way, M. J. 1959. Annals of Applied Biology 47:783-801.

Project No: IFA 82-3-A

Project title: Evaluation of Potting Soil Toxicants

INTRODUCTION:

An on-going screening program to evaluate insecticides applied as a preplant incorporated treatment for nursery potting soil has been conducted since 1974. Until its cancellation of registration in December 1979, chlordane applied at a rate of 4 ozs. of 5% dust per cubic yard was used for treatment of potting soils. In January 1980, chlorpyrifos 5% granular (FA-5) was registered for use at a rate of 0.5 lbs. FA-5/yd^3 of potting media. Although FA-5 is highly efficacious, numerous complaints of phytotoxicity in Central Florida prompted the registrant to withdraw this product from the market in the Fall of 1981. Therefore only two compounds have ever been registered for this use pattern, and neither are currently available.

METHODS AND MATERIALS:

Test procedures used to evaluate all candidate toxicants were as follows: Granular or dust formulations of each candidate tested were blended into nursery potting soil, (BACCTO R, 818 lbs/yd^3) at an initial rate of 10 lbs. AI per three inch acre (equivalent to 11.2 grams AI per cubic yard of media). A portable cement mixer (2 cu. ft. capacity) was used to blend the toxicants into the potting media, and was operated for 1 hour per batch to insure thorough blending. Treated media was then poured into one-gallon plastic pots and weathered outdoors under natural concitions for one month prior to the first bioassay. Bioassays were conducted by confining 40 cc of a fragmented fire ant colony on the soil from each of 3 pots from each treatment series. The

test "colonies" were then observed for 14 days or until mortality of 90% or more of all life forms in each of the three colonies occurred. Treatments which allowed survival of more than 10% of a colony were considered ineffective. Treatments which were judged effective at the first bioassay interval were aged and retested periodically to measure and compare residual activity with Dursban FA-5.

RESULTS:

Results with several compounds and/or formulations are incomplete at the present time (Table 14). However it appears unlikely that any of the candidates will equal or exceed the activity provided by FA-5 or chlordane.

Table 14 . Residual Activity of Candidate Potting Soil Toxicants Weathered Outdoors in Plastic Pots Under Natural Conditions .

Toxicant	Formulation	Formulator	Rate (Gm. AI/yd^3 soil)	Months of residual activity (90% or more motality to test colonies) 1/
Lindane	6WP	Woolfolk	11.2	3
Lindane	5G	Woolfolk	11.2	4 +
Lindane	5G	The Andersons	11.2	2 +
Amaze	5G	Mobay	11.2	4 +
Toxaphene	20D	Woolfolk	11.2	NA
Cypermethrin	2G	ICI Americas	11.2	4 +
Permethrin	2G	ICI Americas	11.2	NA
Endosulfan	5G	Velsicol	11.2	NA

1/ NA = No activity at the dose rate indicated.

Project No: IFA 82-3-B

Project Title: Phytotoxicity of Dursban FA-5 to foliage plants

I. Introduction:

As previously indicated, chlorpyrifos 5% granular (FA-5) was registered in January 1980 for use as a fire ant quarantine treatment for potting media. The registrant (Dow) elected to withdraw FA-5 from the market in 1981 when several cases of possible FA-5 related phytotoxicity were reported. All known cases occurred in Central Florida and inevitably involved greenhouse gown succulent plants. In more than one incident the damage was eventually linked to other problems such as disease, unfavorable growing conditions, etc. (Miller, personal communication). Prior to registration, phytotoxicity trials conducted by this laboratory as well as by Dow indicated that granular chlorpyrifos was not phytotoxic to a wide variety of species when used at the labeled rate of 0.5 lb. FA-5/yd^3 of potting media.

Two studies were conducted in 1982 in an attempt to clarify the issue of FA-5 related phytotoxicity. The first study was conducted at Gulfport, Ms. by IFA Station personnel. A second study was conducted at the Whiteville, N.C. Methods Development Center (USDA, APHIS, PPQ).

II. Methods:

A. Gulfport, Ms. Study

Dursban, FA-5 was thoroughly blended into potting soil (Baccto R, Michigan Peat Co., Houston, Tx.) at 3 different rates of application: 11.2, 22.4, and 112.0 gms AI/yd^3 of potting soil. These rates

are 1X, 2X and 10X the recommended or labeled rate for Dursban FA-5. Four plants (replicates) of the following species were transplanted from 4" pots to 8" pots containing treated soil on July 21, 1982:

Common Name	Variety	Scientific Name
Ivy	Common	*Hedera helix*
Ivy	Varigated	*Hedera helix*
Dragon Tree (Dracaena)	Common	*Dracaena marginata*
Rex Begonia	Delasosa	*Begonia* spp
Spathiphyllum	Mauna Loa	*Spathiphyllum* spp.
Pothos	Common	*Scindapsus aureus*

An identical group of plants was also transplanted into pots containing untreated potting soil. All plants were maintained in a shade house on raised benches and subjected to normal agronomic practices. Phytotoxicity ratings were conducted 4 weeks after transplanting and thereafter at monthly intervals for 6 months at which time the test was terminated. The phytotoxicity rating scale used to rate the appearance of each plant was as follows:

(1) Plants healthy; not different from untreated check.

(2) Slight yellowing, wilting, marginal chlorosis or necrosis.

(3) Symptoms more severe, some leaf drop.

(4) Severe stunting, abnormal leaf or stem structure.

(5) Dead.

B. Whiteville, N. C. Study:

Procedures described in the Gulfport, Miss. study were utilized except that Pengro R potting soil was utilized.

Four plants (replicates) of the following species were transplanted into pots containing treated soil on October 6, 1982.

Common Name	Scientific Name
Kalanchoe	*Kalanchoe* spp.
Common Begonia	*Begonia* spp.
Swedish Ivy	*Plectranthus australis*
Impatiens	*Impatiens* spp.
Angle wing Begonias	*Begonia* spp.

Plants were maintained in a greenhouse and subjected to normal agronomic practices. Phytotoxicity ratings utilizing the rating scale described above were made at monthly intervals for four months after the plants were transplanted into FA-5 treated potting soil.

III. Results:

As shown in Tables 15 & 16 , no adverse effects were produced by the 1X or 2X rate. However, the 10X rate did severely injure Begonias, Kalanchoes and Impatiens. These results indicate that if properly applied (thoroughly blended with the media) the recommended rate of Dursban FA-5 does not necessarily injure plants growing in treated media.

IV. Discussion:

At the current time, the dose rate for FA-5 (as well as chlordane in previous years) is specified on a weight to volume basis, i.e. 0.5 lbs. FA-5 per cubic yard of potting media. Due to the tremendous variation in composition and bulk density of potting soils, overdosing of low-density soils undoubtedly occurs, and in some cases could contribute to the problem of phytotoxicity. For example, treatment of a potting soil with a bulk density of 900 lbs. per cubic yard would result in a concentration of 27.6 PPM Dursban. Treatment of another potting soil with a high vermiculite content (bulk density of 350 lbs. per cubic yard) would result in a concentration of 71.1 PPM.

As a means of preventing this inadvertent overdosing of "light" soils, a variable dose rate based on bulk density of the potting media has been suggested (Table 17). In establishing these rates, several assumptions were made:

1. A variable dose rate based on bulk density of the potting media should prevent "overdosing" of "lighter" soils which could account for phytotoxicity to certain plant species.
2. Residual activity for approximately 18-24 months is desirable.
3. An end-point residue of 3.0 ppm is desirable because this would provide a 10X margin of safety since the LD_{99} to IFA workers is approximately 0.3 ppm.

Table 15 . Phytotoxicity ratings for various species of foliage plants grown in potting soil treated with various rates of Dursban FA-5. Gulfport, Ms. Study .

Plant	Rating at indicated dose rate and transplant interval 1/											
	1 Month			2 Months			3 Months			6 Months		
	1X	2X	10X	1X	2X	10X	1X	2X	10X	1X	2X	10X
Ivy (Common)	1	1	1	1	1	1	1	1	1	1	1	1
Ivy (Varigated)	1	1	1	1	1	1	1	1	1	1	1	1
Pothos	1	1	1	1	1	1	1	1	1	1	1	2
Spathiphyllum	1	1	1	1	1	1	1	1	1	1	1	1
Rex Begonia	1	1	2	1	1.7	2	1	1.7	2	1	2	4.2
Dracaena	1	1	1	1	1	1	1	1	1	1	1	1

1/ Average rating for 4 plants (replicates) per dose rate. 1X Dose Rate = 0.5 lbs. FA-5/yd^3 of soil (11.3 gms AI/yd^3).

Table 16. Phytotoxicity ratings for various species of foliage plants grown in potting soil treated with various rates of Dursban FA-5. Whiteville, N.C. Study.

Plant	Rating at indicated dose rate and transplant interval 1/								
	1 Month			2 Months			3 Months		
	1X	2X	10X	1X	2X	10X	1X	2X	10X
Kalanchoe	1.0	1.3	4.0	1.0	1.3	4.0	1.0	2.5	4.0
Common Begonia	1.0	1.0	3.3	1.0	1.0	3.5	1.0	1.0	4.0
Swedish Ivy	1.0	1.0	1.0	1.0	1.5	3.0	1.0	1.5	3.0
Impatiens	1.0	1.0	3.0	1.0	1.5	3.0	1.0	1.5	3.0
Angel-wing Begonia	1.0	-	-	1.0	-	-	1.0	-	-

1/ Average rating for 4 plants (replicates) per dose rate. 1X dose rate = 0.5 lbs. FA-5/yd^3 of soil (11.3 gms AI/yd^3).

Table 17. Suggested Dose Rates for Use of Granular Chlorpyrifos on Nursery Potting Soil for Fire Ant Quarantine Treatment

Bulk Density of Potting Soil (lbs/ yd^3)	Grams AI/Yd^3 of Media	Ounces of 0.5% Granular chlorpyrifos/yd^3 of Media	Theoretical Dose Rate (PPM) Initial Immediately After Treatment	Theoretical Dose Rate (PPM) End Point 1/ Approximately 20 Months after Treatment
300	1.63	11.5	12	3
350	1.85	13.0	12	3
400	2.17	15.3	12	3
450	2.44	17.2	12	3
500	2.72	19.2	12	3
550	2.99	21.1	12	3
600	3.26	23.3	12	3
650	3.54	25.0	12	3
700	3.80	26.8	12	3
750	4.08	28.8	12	3
800	4.35	30.7	12	3
850	4.63	32.7	12	3
900	4.89	34.5	12	3
950	5.17	36.5	12	3
1000	5.45	38.5	12	3
2000	10.89	77.0	12	3

1/ Based on a calculated half-life of 10.4 ± 3.8 months . Calculations provided by Dr. C. A. McDaniel USDA, APHIS, NMRL, Gulfport, Ms. from data generated by Mr. James Spence, Chemist, NMRL.

4. The use of a low concentration granule (0.5%) will insure a more uniform treatment due to the physical limitations associated with blending small amounts of pesticide into potting media (especially in situations where automated mixing equipment is not available). Therefore, the computations in Table 17 are based on a 0.5% granule.
5. The suggested dose rates given in Table 17 are based on a calculated half-life of 10.4 $\pm$ 3.8 months. These calculations were provided by Dr. C. A. McDaniel (NMRL), and are based on GLC Analysis of potting soil treated with Dursban 15G.

Project No: IFA-82-4

Project Title: Evaluation of pour-on treatments for certification of vegetable transplants

INTRODUCTION: A 5% granular chlorpyrifos formulation known as FA-5 was registered for use by Dow Chemical Company as a preplant incorporated treatment for potting and bench soils in December 1979. During the spring and summer of 1981, numerous complaints of phytotoxicity and subsequent lawsuits occurred in Central Florida. Eventually lawsuits exceeded sales, and Dow withdrew FA-5 from the market in November 1981. In an effort to provide an alternate certification procedure for vegetable transplants, we evaluated several pour-on treatments with a group of insecticides commonly used by the nursery industry. Results of these tests are reported here.

METHODS:

Baccto® potting soil (Michigan Peat Co. P.O. Box 66588, Houston, Texas) was used as the growing medium. Six-compartment plastic trays (dimensions of each compartment were 1.5 x 1.5 x 2.25") were filled with potting soil and planted to the following vegetables on November 10, 1981:

Vegetable	Scientific Name	Variety
Broccoli	Brassica olerecea	Calabrese
Cabbage	Brassica oleracea	Early Jersey Wakefield
Cauliflower	Brassica oleracea	Early Snowbaii
Collards	Brassica oleracea	Vates
Eggplant	Solanum melongonia	Black Beauty
Lettuce	Lactuca sativa	Iceburg
Pepper, Hot	Capsicum frutescens	Anaheim chili
Pepper, Bell	Capsicum frutescens	Yolo Wonder
Tomato	Lycoperscion esculentum	Homestead EM

Emerged seedlings were thinned to one plant per compartment after they reached the first true leaf stage. The plants were maintained in a greenhouse and subjected to normal agronomic practices. Flats were watered as needed and fertilized weekly with 12-6-6 liquid fertilizer according to label directions.

INSECTICIDAL TREATMENTS:

On December 7, 1981, the following treatments were applied to the point of run off with a garden watering can:

Insecticide and Formulation	Formulator	Rate (lbs AI/100 gal. H_2O)
Sevin 2L	Red Panther Chem.	0.5
		1.0
		2.0
Orthene 75S	Chevron Chem.	0.5
		1.0
		2.0
Dursban 4E	Dow Chem.	.25
		.50
		1.00

Initial Kill:

In order to determine initial kill (simulated infestation at the time of treatment), 1 alate queen was buried 1/2" deep and recovered with soil in each compartment of a six-compartment flat. Infested flats were then treated to the point of run-off with one of the treatments listed above. Twenty-four hours later, the soil from each plant tray was carefully removed and the implanted alate queen recovered.

Residual Activity:

Treated soils were retained in the greenhouse and periodically bioassayed with alate queens to determine residual activity and/or length of certification period afforded by each treatment. Bioassays were conducted according to standard laboratory procedures described elsewhere.

Phytotoxicity:

Phytotoxicity ratings were conducted at 2, 3 and 4 weeks following treatment. Damage was evaluated based on the overall appearance of the plants compared to an untreated check of the same variety. The phytotoxicity rating scale used to compare the effects of each treatment was as follows:

(1) Plants healthy; not different from untreated check

(2) Slight yellowing, wilting or other mild symptoms such as marginal chlorosis.

(3) Symptoms more severe, leaf drop or necrosis.

(4) Severe stunting, abnormal leaf or stem structure.

(5) Dead

RESULTS AND DISCUSSION:

Initial Kill - Initial kill provided by each treatment evaluated is shown in Table 18. Dursban provided 100% kill at each rate tested, other treatments were slightly less effective.

Residual Activity - As indicated in Table 19,all treatments provided excellent control up to 1 week after application. All Dursban treatments were 100% effective for 6 weeks after treatment, at which time the test was discontinued, since a longer certification period would not be an important criteria for a "treat and ship" treatment for bedding plants.

Phytotoxicity - Phytotoxicity ratings for each treatment are listed in Table 20. Although ratings were conducted at 2, 3, and 4 weeks following treatment, only the 2 week posttreatment rating is shown here.

All treatments evaluated damaged 1 or 2 more plant species to some degree. Degree of damage ranged from slight to extensive, depending upon plant species and treatment applied. Less damage was noted with Dursban at 0.25 lbs AI/100 gallons of water than with other rates tested, and only minimal damage was noted with Orthene at 0.5 lbs AI.

Based on initial kill, length of residual activity, and degree of pnytotoxicity, Dursban applied at a rate of 0.25 lbs. AI/100 gallons of water seems to be the preferred treatment among the series evaluated.

Table 18. Effectiveness of Various Pour-on Treatments for Control of IFA Queens Artificially Implanted in Greenhouse Flats.

Treatment Insecticide	Rate (lbs.AI/100 gal. H_2O)	% Kill of Artificially Implanted Alate Queens 24 hours after treatment 1/
Sevin	0.5	84
	1.0	84
	2.0	100
Orthene	0.5	84
	1.0	84
	2.0	67
Dursban	.25	100
	.50	100
	1.00	100
Untreated Check		0

1/ Average of 6 replicates.

Table 19. Residual Activity of Various Pour-on Treatments applied to Vegetable Transplants Growing in Greenhouse Flats.

Treatment		% Mortality of Alate Queens confined to treated soil at indicated Post treat Interval 1/				
Insecticide	Rate(lbs.AI/100 gals.H_2O)	24 hrs.	1 wk.	3 wks.	4 wks	6 wks
Sevin	0.5	25	75	30	10	10
	1.0	85	100	55	0	15
	2.0	100	100	100	20	5
Orthene	0.5	100	100	100	75	45
	1.0	100	100	100	70	100
	2.0	100	100	100	100	100
Dursban	.25	100	100	100	100	100
	.50	100	100	100	100	100
	1.0	100	100	100	100	100
Untreated check		0	5	15	5	20

1/ Avg. of 4 replicates; 5 alate queens/replicate. 72 hrs. exposure to treated soils except the bioassay conducted 3 wks. after treatment was based on a 48 hour exposure interval.

Table 20. Phytotoxicity Rating for Various Pour-on Treatments applied to Vegetable Transplants Growing in Greenhouse Flats.

Vegetable and Variety		Dosage and Phytotoxicity Rating for: 1/ Sevin 2 L			Orthene 755			Dursban 4EC		
		0.5	1.0	2.0	0.5	1.0	2.0	.25	.50	1.0
Broccoli	"Calabrese"	2.25	3	3.25	2	1.25	2.5	1	2	2
Cabbage	"Early Jersey Wakefield"	2	4	4	1	1	1	2.25	3	3
Cauliflower	"Early Snowball"	2	2	2	1	1	1	1	1	2
Collards	"Vates"	2	3	3	2	2	2.25	1	2	2
Eggplant	"Black Beauty"	2	3	3.5	1	2	2	1.5	2.25	3.25
Lettuce	"Iceberg"	2.5	2.5	2.5	1.25	2	2.75	3.5	4.5	4.5
Pepper, Hot	"Anaheim chili"	1	1.25	3.5	1	1	1.75	1	1	2
Pepper, Bell	"Yolo Wonder"	1.25	2	2	1	1	2	1	1	1.25
Tomato	"Homestead"	3	4.5	4.75	2	2	3	1.25	2	4

1/ Insecticide dosages shown are lbs. AI/100 gals. H_2O. Phytotoxicity Ratings based on 4 replicates, 1 plant per replicate.

Project Number: IFA 82-7

Project Title: Shelf life studies with Avermectin fire ant bait

INTRODUCTION:

Storage or shelf life of imported fire ant baits has long been a problem with certain types of formulations. Some inert carriers are known to enhance oxidation and and rancidity of the soybean oil. Since rancid baits are not actively accepted and fed upon by foraging workers (Lofgren et al 1964), poor control may result from field applications of baits in this condition. In early studies with degradable formulations of mirex, a copper catalyst was used to enhance the degradation process. However, the copper also promoted oxidation and subsequent rancidity of the oil and was excluded from further testing.

METHODS AND MATERIALS:

On May 20, 1982 a study to determine the effects of storage under two different temperature regimes was initiated for two formulations of Avermectin. Subsamples of each formulation were removed from larger containers (25 lb. fiber drums), and placed in 10" x 12" zip lock plastic bags which were in turn placed in cardboard boxes.

The boxes were then stored under two different temperature regimes: (1) One group of boxes was stored in the laboratory at ambient conditions of 70-74°F. (2) The second group was stored in a non-temperature controlled warehouse which occasionally reached temperatures greater than 100°F. Storage under these conditions would be normal and expected for most of the area infested by the imported fire ant.

Samples (1 bag per sampling interval) were removed at approximately 1 month intervals from May 1982 to Jan. 1983 and subjected to the following bioassay procedures:

1. General - A laboratory bioassay for feeding acceptance is a standard test used to determine the relative attractancy of various IFA baits or components of baits. Field-collected captive ant colonies are given a free choice to select and feed on either a candidate bait (the bait under evaluation) or a freshly prepared standard bait. It is assumed that the ants will indicate their preferance by consuming greater quantities of the bait of their choice.
2. Collection of Ant Colonies - Fragments of colonies containing all life forms (workers, immature, winged sexuals and occasionally the mated queen) are collected from infested fields by shoveling a portion of the nest tumulus into a plastic dish pan. The colonies are then transported into the laboratory and allowed to acclimate and rebuild the next structure for 3-4 days prior to testing.
3. Preparation of the Standard Bait - A standard bait known to be attractive to ants is prepared by mixing fresh soybean oil with pregelled defatted corn grits 30%:70% w/w. The standard bait is prepared one day prior to the test.
4. Candidate bait - The candidate bait is any potentially attractive oil, experimental bait formulation, or formulated bait which may have deteriorated due to storage, etc. Each candidate bait is tested on five different colonies, and the results reported as an average response of all colonies.

5. Bioassay - Four grams of a candidate bait contained in a plastic petri dish are placed on the surface of each of the 5 test colonies. Simultaneously, 4 grams of the freshly prepared standard bait in an identical container are placed approximately 4-5 inches from the candidate bait. Foraging workers are then provided a free choice to feed on the bait of their preference. After a 24-hour feeding period, the dishes are removed and the amount of each bait consumed is determined by weighing.

6. Computation of Acceptance Ratio - An acceptance ratio for each candidate bait is computed in the following manner:

$$\frac{\text{No. grams candidate consumed}}{\text{No. grams standard consumed}} = \text{acceptance ratio}$$

An acceptance ratio with a value of less than 1.0 indicates that a given candidate is less attractive than the standard. Values equal to or greater than 1.0 indicates that a candidate is equally or more attractive than the standard.

Lofgren et al. (1961) reported on the evaluation of 222 different food materials, and provided a list of those which gave an acceptance ratio of 0.75 or higher. By convention, this figure has become the minimum ratio recognized as acceptable by most IFA researchers.

RESULTS:

As shown in Table 21, storage of Avermectin fire ant baits for 8 months did not adversely affect the acceptability of the pregelled defatted corn formulation. The PGD formulation was initially more attractive than the corn cob grit formulation and remained so throughout the test. Some decrease in acceptance of the CCG formulation was noted after 8 months of storage under warehouse conditions.

Table 21. Feeding acceptance of two Avermectin formulations stored at two temperature regimes.

Bait Formulation	Storage Conditions	$\bar{X}$ acceptance ratio after storage for indicated time period (months) 1/								
		0	1	2	3	4	5	6	7	8
.011% on pregelled defatted corn	Laboratory (70° - 74° F)	1.1	1.0	1.0	1.0		1.0	.8	1.1	1.0
.011% on pregelled defatted corn	Warehouse (Uncontrolled temp.)	-	.9	1.2	.9		1.1	1.3	1.0	1.8
.011 % on corn cob grits	Laboratory (70° - 74° F)	.4	.8	.8	.8		.4	.4	.3	.5
.011% on corn cob grits	Warehouse (Uncontrolled temp.)	-	.8	.9	.8		1.1	.4	.4	.3

1/ Mean based on laboratory observations of 5 ant colonies. Acceptance ratios computed after a 24-hour feeding period wherein ants were allowed equal opportunity to feed upon a candidate bait versus a freshly prepared standard bait consisting of 30% SBO and pregelled defatted corn. Test intiated May 20, 1981.

REFERENCES CITED

Lofgren, C.S., F.J. Bartlett, and C. E. Stringer. 1961. Imported fire ant toxic bait studies: The evaluation of various food materials. J. Econ Ent. 54:1096-1100.

Lofgren, C.S., F.J. Bartlett, and C.E. Stringer. 1964. The acceptability of some fats and oils as food to imported fire ants. J. Econ. Ent. 57:601-602.

Project Number: IFA 82-8-A

Project Title: Testing and development of alternate carriers for bait formulations

Introduction

Inert carriers are essential components in any bait formulation. Milled and sized corn cobs (corn cob grits) was the carrier of choice for use with all mirex formulations including 4X mirex, 10-5 mirex, and ferriamicide. Performance of most other bait toxicants is usually enhanced when more friable and absorbent carriers are used. Considerable effort has been expended in the search for carriers that are inexpensive, readily available, highly absorbent, friable, flowable, degradable and compatible with existing application equipment. Incompatibility with application equipment as well as expense and availability are associated with many of the more friable and absorbent carriers such as pregelled defatted corn, pregelled degermed corn, puffed corn, processed sugarbeet pulp, etc.

Fur-Ag R (Quaker Oats Co.) has been used as a carrier in some mirex formulations (Banks, et. al. 1972). Fur-Ag is the trade name for the residue remaining after the processing of corncobs for furfural. Fur-Ag resembles coffee grounds in texture and appearance (Anon. 1965). Cob-Fil R (Dehyco Company, 1000 Kansas St., Memphis, Tenn.) is a product very similar to fur-ag. A sample of cob-fil was obtained in September 1982 and evaluated as a potential carrier for imported fire ant baits.

A. Test 1 - 9/8/82

The dyed food technique described by Bartlett and Lofgren (1961) was used to compare the relative attractiveness of a cob-fil bait with a pregelled defatted corn bait. Ingredients of each bait were as follows:

Pregelled defatted corn bait:		Cob-fil R bait:	
pregelled defatted corn	70%	cob fil	80%
soybean oil	29.75%	soybean oil	19.75%
calico oil dye	.25%	calico oil dye	.25%
	100 %		100%

Forty eight hours after preparation, 5 tablespoons of each formulation were applied to each of 5 different ant colonies in an infested field. After 24 hours, approximately 20 cc of worker ants were collected from each colony. The percentage of workers containing dye in the alimentary tract was then determined by crushing 100 ants from each colony between two pieces of white bond paper. Fifty-two percent of the ants from colonies offered the pregelled defatted corn bait contained dye whereas only 4% of the ants offered the cob-fil bait contained dye.

The relative non-attractiveness of the cob-fil bait was assumed to be related to residual contaminants from the manufacturing of furfural. A similar problem was noted with fur-Ag and was solved by ammoniating the Fur-Ag prior to formulating the bait (Anon. 1965). Apparently the ammoniation process neutralizes traces of sulfuric acid which is used in the furfural extraction process.

B. Test 2 - 11/22/82

A 1000 gram batch of unprocessed cob-fil was rinsed for 5 minutes in a 1% ammonium hydroxide solution at room temperature, rinsed in tap water and air dried prior to formulating.

A second batch of cob-fil was rinsed in a 5% sodium bicarbonate solution, tap water rinsed and air dried. Three bait formulations were then prepared with the following ingredients:

Formulation A

Pregelled defatted corn - - - -	70%
Soybean oil - - - - - - - - - -	29.75%
Calico oil dye - - - - - - - - -	.25%
	100%

Formulation D

Ammoniated cob-fil - - - - - -	70%
Soybean oil - - - - - - - - -	29.75%
Calico oil dye - - - - - - - -	.25%
	100%

Formulation E

Sodium Bicarbonated cob-fil- -	70%
Soybean oil - - - - - - - - - -	29.75%
Calico oil dye- - - - - - - - -	.25%
	100%

Each formulation was field tested for feeding acceptance as described in Test 1. Results of these tests were as follows:

Carrier	$\bar{X}$ % worker ants containing dye
Pregelled defatted corn	53
Ammoniated cob-fil	35
Sodium Bicarbonated cob-fil	51

These results indicate that treatment of cob-fil with either an ammonium hydroxide or sodium bicarbonate solution prior to bait formulation greatly enhances feeding acceptance of cob-fil baits.

An evaluation of various oil loading levels indicated that absorption of 25 to 28% soybean oil could be achieved without compromising flowability. Therefore, cob-fil was determined to fulfil several requirements considered necessary for IFA bait carriers.

References cited

Anon. 1965. Report for July 1, 1962 - April 30, 1965. Methods Improvement Section, USDA, ARS, PPCD. Gulfport, Ms. 133 pages mimeographed.

Banks, W. A., G. P. Markin, J. W. Summerlin, and C. S. Lofgren. 1972. Four mirex bait formulations for control of the Red Imported Fire Ant. Jour. Econ. Ent. 65:1468-1470.

Bartlett, F. J. and C. S. Lofgren. 1961. Field studies with baits against *Solenopsis saevissima* v. *richteri* the imported fire ant. Jour. Econ. Ent. 54: 70-73.

Project No: IFA-82-8-B

Project Title: Comparison of 3 AMDRO Formulations for Treatment of Individual IFA Colonies

Small plot tests with AMDRO formulated with various carriers were conducted in Harrison County, Miss. in August 1982, to determine the effectiveness of a simulated "homeowner treatment". Numerous studies comparing efficacy of these formulations applied broadcast by both aerial and ground equipment have been conducted, but only limited information on their effectiveness as individual colony treatments was available.

All formulations were applied at a rate of 5 Tbs. per ant colony to each colony in 210' x 210' (1 acre) test plots. Efficacy of each formulation was determined by establishing 1/4-acre subplots within each test plot and monitoring treatment effects according to procedures described by Harlan et al (1981).

As shown in Table 22 standard or commercial AMDRO was the most efficacious formulation evaluated.

Table 22. Evaluation of 3 Formulations of AMDRO for Single Mound Treatments
Imported Fire Ant Station, USDA, APHIS, PPQ, Gulfport, Miss.

AMDRO Formulation 1/	Pretreatment Population		Colony Mortality at Indicated Post-Treatment Interval			% Change in Pre-Treatment Pop. Index at Indicated Post-Treatment Interval		
	No. Colonies/ Plot	Pop. Index	1 Wk.	4 Wks.	14 Wks.	1 Wk.	4 Wks.	14 Wks.
"F"								
Rep 1	11	85	82	73	9	-80	-74	-7
Rep 2	11	96	9	73	36	-21	-82	-49
Rep 3	7	67	29	86	43	-44	-96	-60
Average	9.6	62.3	40	77	29	-48.3	-84	-38
"G"								
Rep 1	7	60	71	71	0	-73	-75	-15
Rep 2	9	73	78	100	56	-79	-100	-59
Rep 3	11	96	64	82	9	-65	-84	-23
Average	9	76.3	71	84	22	-72.3	-86	-32
"Standard"								
Rep 1	12	104	83	100	8	-86	-100	-17
Rep 2	10	83	90	90	90	-88	-90	-90
Rep 3	13	120	77	100	77	-81	-100	-86
Average	11.6	108.3	83.3	96	58	-85	-97	-64
Untreated Ck.	10	88	30	30	30	-38	-45	-27

1/ All Formulations applied by hand at a rate of 5 TBS/colony to 1-Acre test plots located in a grazed pasture at Gulfport, Ms., August 17, 1982

References cited

Harlan, Donald P., W. A. Banks, H. L. Collins, and C. E. Stringer. 1981. Large area tests of AC-217,300 bait for control of Imported Fire Ants in Alabama, Louisiana, and Texas. Southwestern Entomologist 6(2): 150-157.

AERIAL APPLICATION OF IMPORTED FIRE ANT BAITS

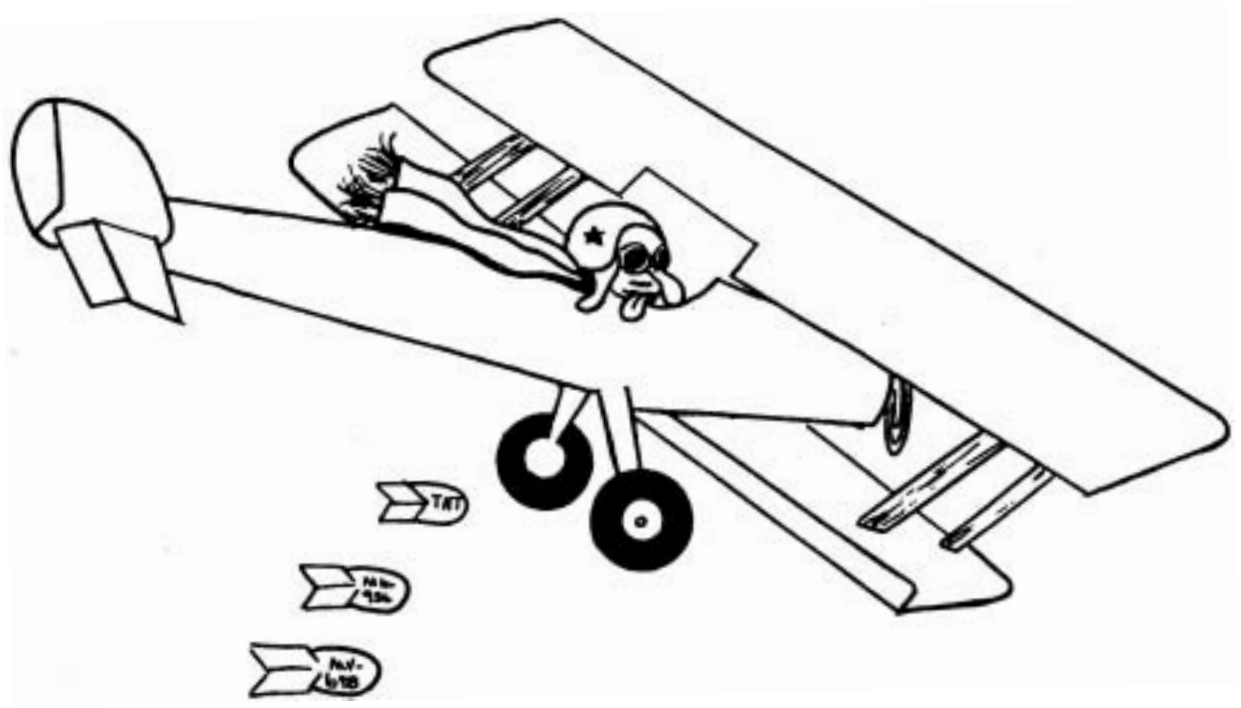

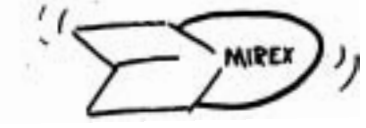

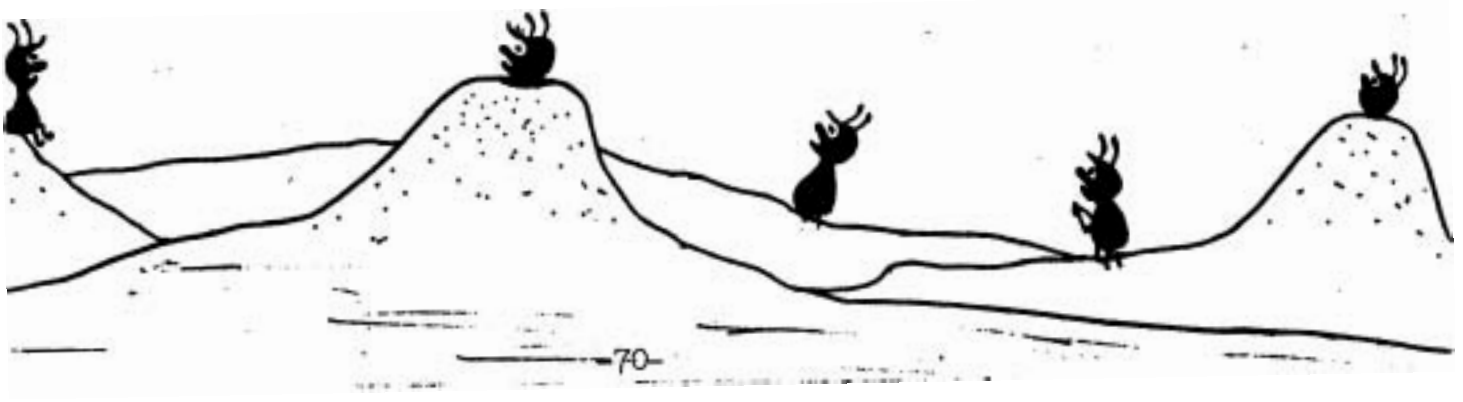

This information was assembled for use by U. S. Department of Agriculture, Animal and Plant Health Inspection Service, Plant Protection and Quarantine personnel and key personnel in other agencies engaged in imported fire ant control programs. Mention of trade names or proprietary products does not constitute an endorsement or recommendation for use by the U. S. Department of Agriculture.

By:

Homer L. Collins, PPQ Methods Development, Gulfport, Mississippi and
Timothy J. Roland, PPQ Aircraft Operations, Mission, Texas

Revised December 1982

Contents

	Page
I. Introduction	1
II. General Guidelines	2
A. Influence of weather on efficacy	2
B. Storage and handling of bait	3
III. Dispersal Equipment	3
A. Equipment for corn cob grit baits.	3
1. Flow restrictors	
2. Gate stops	
3. Spreaders	
B. Equipment for pregelled defatted corn baits.	4
1. Gate seal baffle assembly	4
2. Gate seal side plates	5
3. Hopper inlet air system	5
4. Spreaders	5
IV. Calibration	6
A. Swath checking	6
B. Calculation of acres per minute treated	7
C. Calibration flights	8
V. Glossary of Terms	9
VI. Acknowledgements	11

Introduction

Aerial dispersion of toxic baits is the most cost-effective means of controlling imported fire ants over large areas. Mirex bait was successfully applied to 10-15 million acres annually with a variety of aircraft from the early 1960's until 1977. The composition of mirex bait (corn cob grits saturated with 15% soybean oil in which the toxicant was dissolved) resulted in an inexpensive and readily dispersed formulation with few application problems. The free flowing and resilient corn cob grit particles required no agitation to prevent bridging in aircraft hoppers, and did not crush or smash upon impact as they traversed through the various delivery systems employed.

Although corn cob grit formulations are excellent from an application standpoint, the biological activity of most, if not all, toxicants is greatly enhanced when formulated on a more friable and absorbant particle such as pregelled defatted corn. However, there are several drawbacks associated with the use of this type of carrier:

1. Agitation is required to prevent bridging in hopper.
2. Smashing or crushing of particles on metal surfaces causes "peanut buttering".

At the time this was written, AMDRO was registered for aerial application and several other toxicants [1/] were under various stages of development. Pregelled defatted corn was used as a carrier in 1 or more formulations of each product. Meanwhile, industry as well as USDA scientists continue to search for alternate carriers with the following characteristics:

1. inexpensive
2. readily available
3. highly absorbant ($>$ 25% oil carrying capacity)
4. friable
5. flowable
6. degradable
7. compatable with existing application equipment

1/ BANT (Elanco) , Prodrone (Stauffer), Avermectin (Merck & Co.), RO 15-5223 (MAAG) and JH 286 (Montedison).

However, several steps have been taken to alleviate the problems associated with aerial application of imported fire ant baits formulated with the pregelled defatted corn carrier. The purpose of this document is to fully explain the equipment and modifications necessary to accurately apply these baits with light aircraft (Category "D"). Additionally, suggestions have been made regarding procedures for aircraft calibration and factors which influence the overall success of control programs.

The information given here is intended to supplement the PPQ control manuals concerning aerial application. Much of this information is drawn from these sources; however, the equipment and procedures needed for application of some fire ant baits have not been documented elsewhere.

II. General Guidelines for Bait Application

A. Weather

Efficacy of all fire ant baits is directly affected by weather conditions. Ants do not forage when soil temperatures are less than 60° F. Thus, if bait is applied under these conditions, it will not be picked up by foraging workers and distributed to the ant colony. Foraging is also greatly diminished under extremely hot, dry conditions. Mid-day application under these conditions should be avoided when possible.

Bait should not be applied when plant foliage is wet from heavy dew or recent rainfall. Obviously wind directly affects bait displacement, and wind of varying velocities and directions is far more detrimental than steady winds. There are no hard and fast rules relative to wind, but in general it is acceptable to continue treatment until the wind velocity is 10 knots or higher. Pilots prefer to spray crosswind, starting on the downwind side, and working into the wind. This keeps the bait off of the airplane and also protects the flagmen from exposure to the falling bait. Before beginning a control program with any fire ant bait. READ THE LABEL.

B. Storage and Handling

Fire ant baits must be kept dry. When possible, hangers, warehouses, other suitable buildings at the airport, or enclosed van truck trailers should be used for storage. When suitable enclosed storage facilities are not available on or near the airport, it may be necessary to stockpile the pesticide near the loading site. Material stored outside of buildings should be stacked on pallets and protected with water proof covers.

Instructions for disposal of empty containers are printed on the label. READ THE LABEL. Protective clothing such as rubber gloves may be indicated, and must be used by loaders if so stated on the label. All currently used fire ant baits employ soybean oil as a feeding attractant and soybean oil will eventually become rancid and non-palatible. Storage of any bait at high temperatures for long periods should be avoided.

III. Dispersal Equipment

As previously stated, fire ant baits are formulated on two basic types of carriers: (A) corn cob grits and (B) pregelled defatted corn. Selection of the proper dispersal equipment for use with any given bait is totally dependent upon the carrier used to formulate that bait. Regardless of the type of carrier or dispersal equipment, the aircraft hopper must be clean and dry before loading the material into the hopper.

A. Corn cob grit baits:

1. Flow restrictors

These baits are free flowing and do not require agitation to prevent bridging in the hopper. In some aircraft, flow restrictors are required in the hopper throat to reduce the flow rate and sensitivity of the control gate adjustments. Various devices have been used for this purpose, and include sawtooth baffles or plates with rectangular slots (Fig. 1). Such a device is installed directly above the control gate and is designed so that as the gate is opened, the granules will flow only through the sawteeth or slots.

2. Gate Stops

Gate stops are required to assure that the hopper gate is opened to exactly the same position each time it is opened. Screw-type gate stops are preferred. Gate stops that are adjustable through a series of holes or notches are not acceptable. This requirement also applies to pregelled defatted corn.

FIGURE NO. 1

FLOW RESTRICTORS

SCALE: 1/4" = 1"

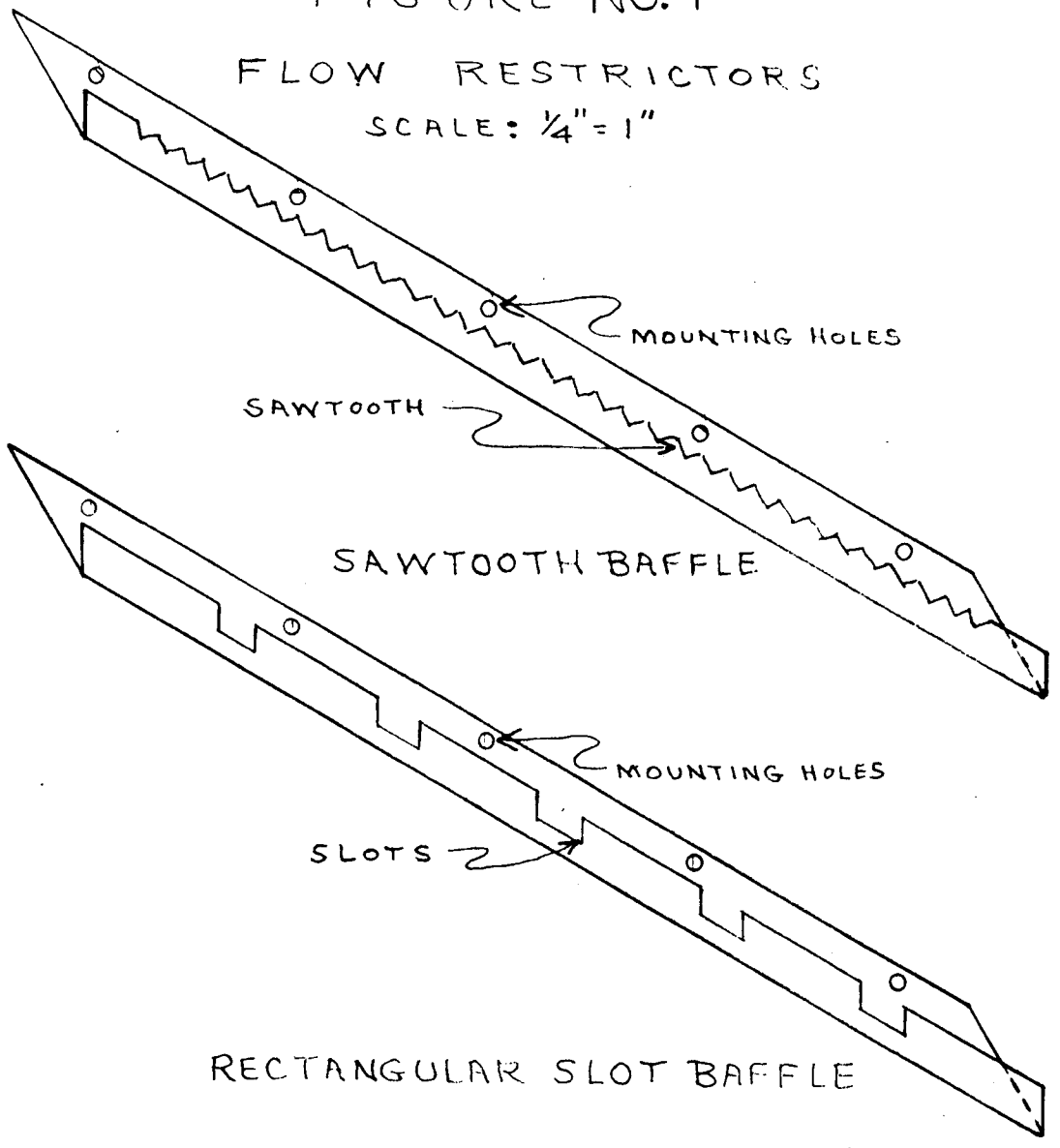

3. Spreaders

A variety of aircraft spreaders can be used to apply corn cob grit baits. Maximum swath-width is achieved with Swathmaster R 1/ spreaders or variations thereof. Most spreaders must have vanes or other devices to produce uniform deposits of maximum swath width. Corrections for light or heavy deposits across a swath can be made by moving vanes, by partially or totally blocking areas between vanes, or by adding baffles to the air intake.

B. Pregelled defatted corn baits:

Several modifications of all known existing systems are necessary for application of pregelled defatted corn baits. A brief description of a system proven successful for use on a 1977 Cessna Ag-Truck follows.

1. Gate Seal Baffle Assembly

Use of a gate seal baffle is mandatory in order to achieve precise calibration with pregelled defatted corn baits. This is not a commercial item and must be custom made; therefore, specifications may vary greatly depending upon aircraft and equipment design. A gate seal baffle assembly designed for use with a 1977 Cessna Ag Truck is shown in Figure 2. Calibration is achieved by installing orifice plates (Figure 3) of various sizes into the gate seal baffle assembly. The orifice size required will vary depending upon bulk density, flow rate, oil content, particle size, etc. for any given bait. An entire set of orifice plates ranging in size from 29/64" to 33/64" in 1/64" increments should be on hand when calibrating the aircraft.

1/ Transland, Inc., Harbor City, Cal. 90710

FIGURE NO. 2

GATE SEAL BAFFLE ASSEMBLY

SCALE: 1/4" = 1"

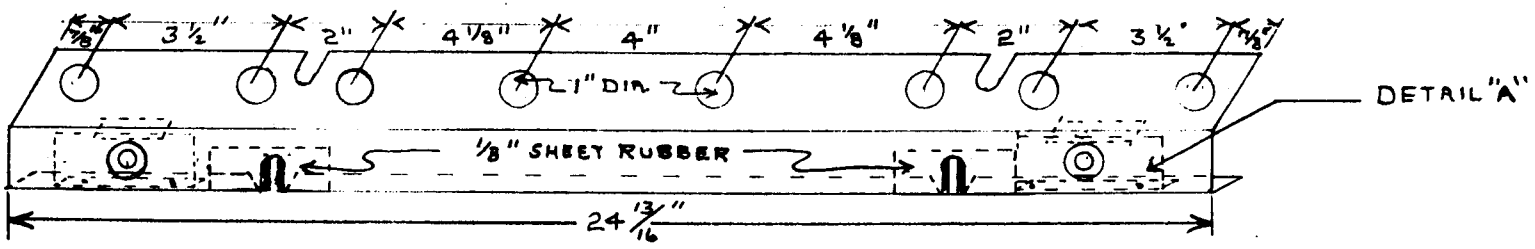

MATERIAL: 0.025" STAINLESS STEEL

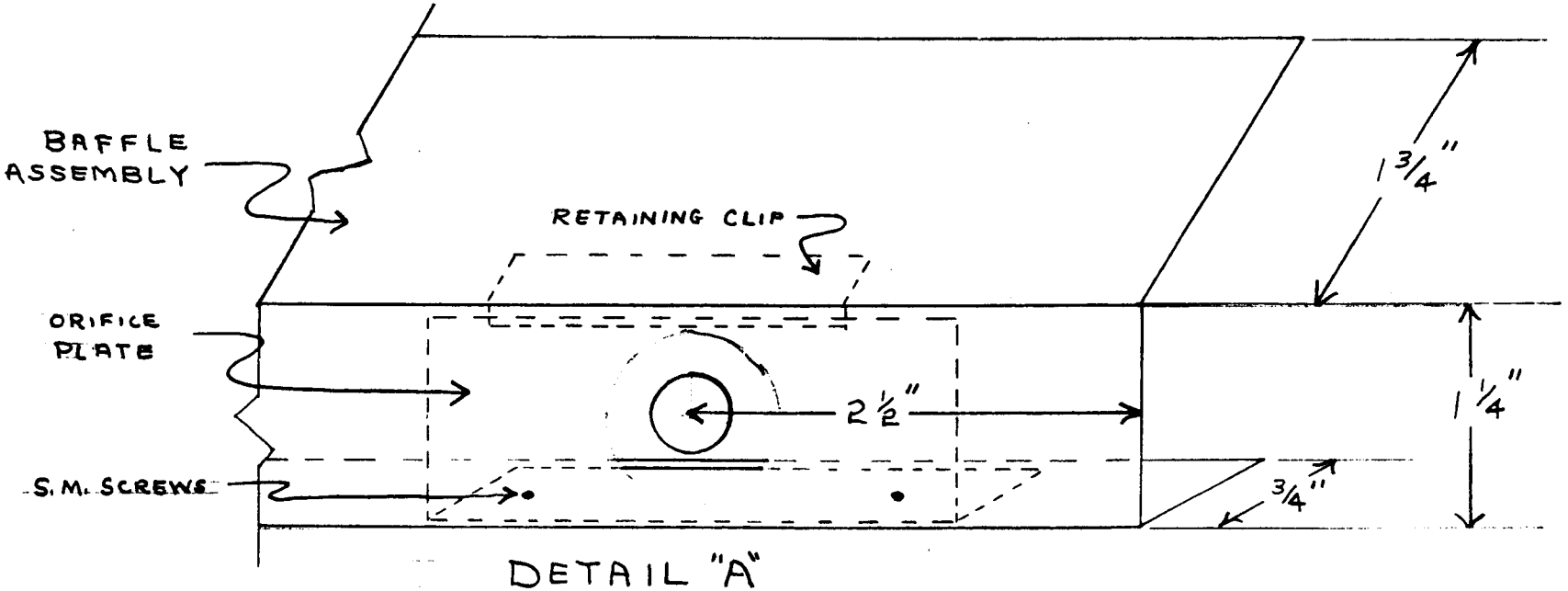

DETAIL "A"

SCALE = FULL

FIGURE NO. 3

ORIFICE PLATE

SCALE: FULL

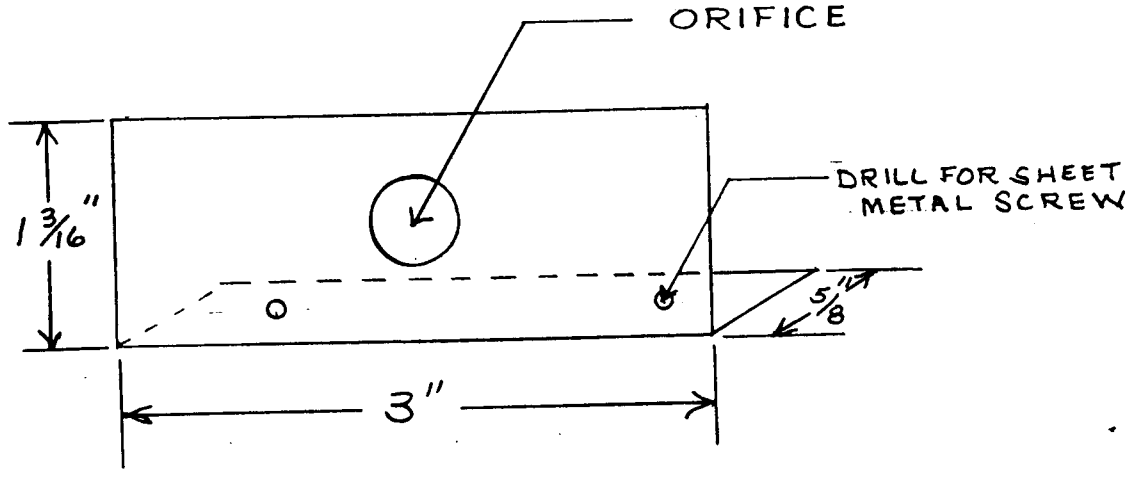

MATERIAL: 0.025" ALUMINUM

2. Gate Seal Side Plates

Metal plates are required to prevent bait flow through the triangular opening at each end of the gate when it is in the open position (Fig. 4). The plates form a pressure seal against the gate seal ends to prevent bait leaks. The plates are not commercially available. Dimensions and assembly plan for plates for a 1977 Cessna Ag Truck are shown in Figure 5.

3. Hopper Inlet Air System

A special inlet air system must be installed in the hopper to provide positive air pressure directly over the orifice plates while the bait is being drawn through the orifice by negative air pressure created by the venturi action while in flight. This procedure also insures a constant flow rate regardless of the amount of material in the hopper. Hopper inlet air systems are not commercially available and must be custom fitted to each aircraft. An air system for a 1977 Cessna Ag-Truck is described in Figures 6A and 6B.

4. Spreaders

Both Transland [1/] high volume and slim line spreaders have been used successfully. Do not use Transland Swathmaster models or spreaders similar in design. Pregelled defatted corn particles will smash upon impact with various metal surfaces and cause a gradual buildup of "peanut butter" which could eventually clog the system.

1/ Transland, Inc. Harbor City, Cal. 90710

FIGURE NO. 4

GATE POSITIONS

SCALE: NONE

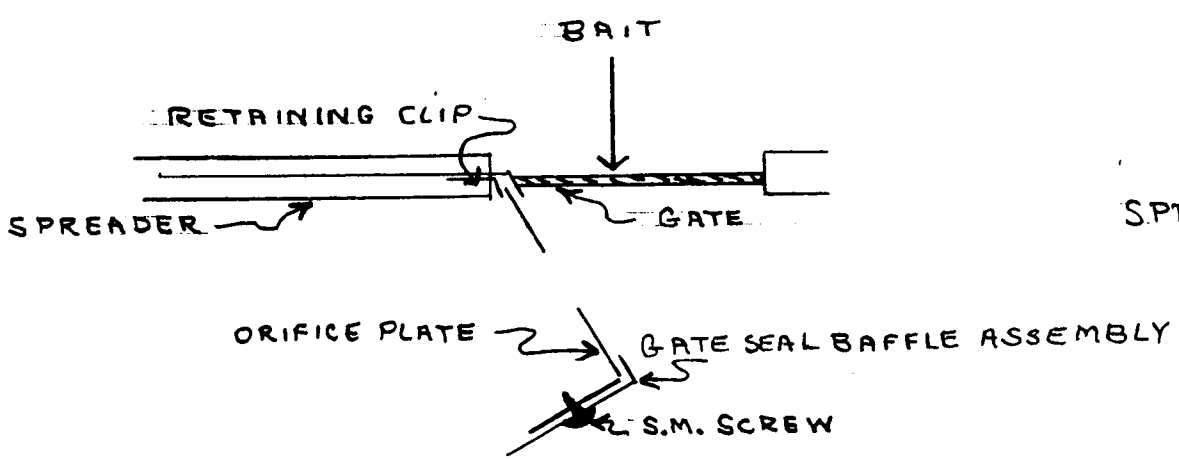

GATE CLOSED

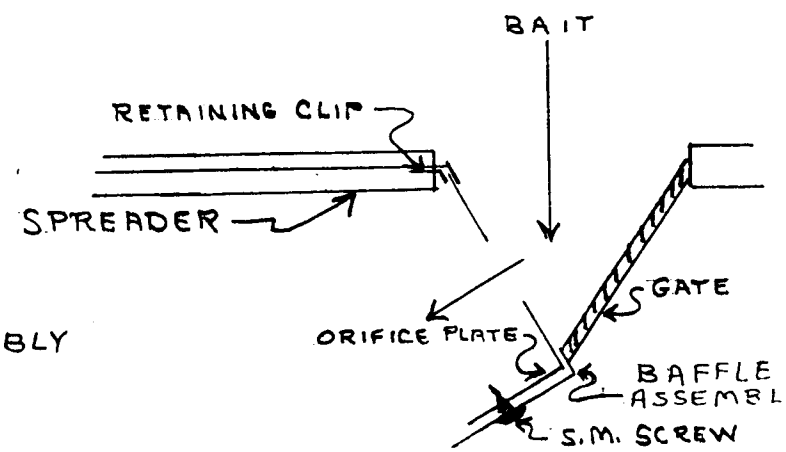

GATE OPEN

FIGURE NO. 5

SIDE PLATES

SCALE: ½

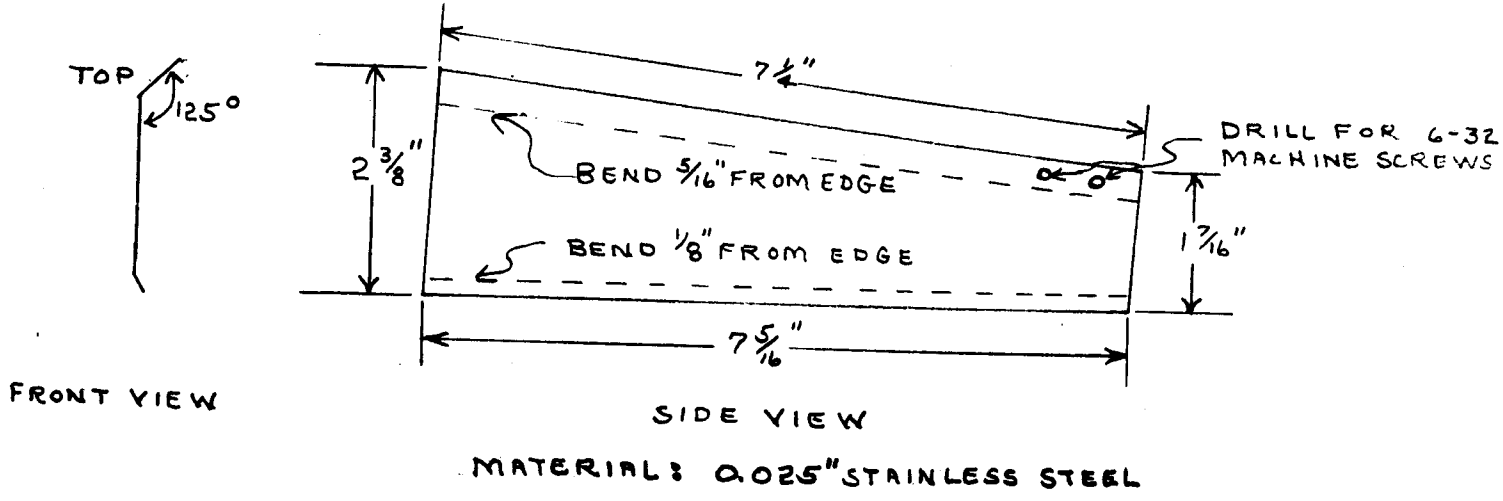

MATERIAL: 0.025" STAINLESS STEEL

FIGURE NO. 6

HOPPER INLET AIR SYSTEM

SCALE: NONE

FIG. 6A

FRONT VIEW

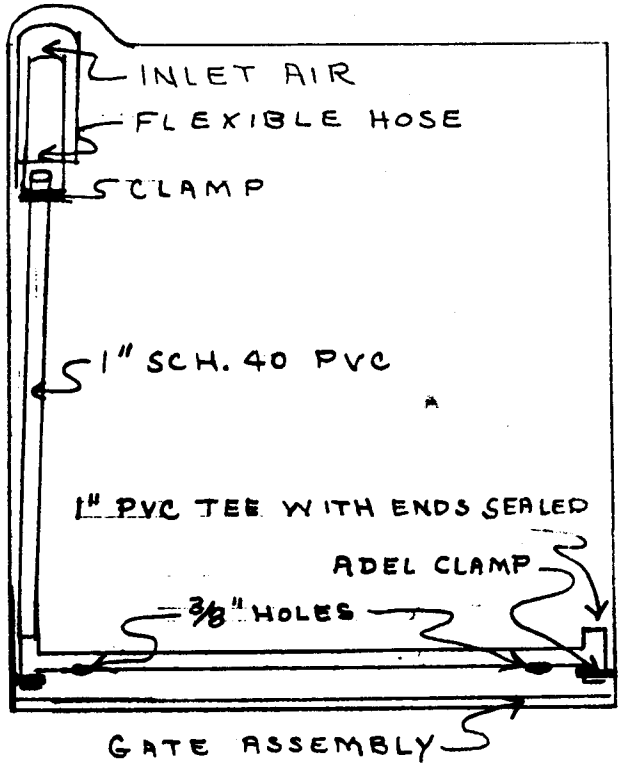

FIG. 6B

SIDE VIEW

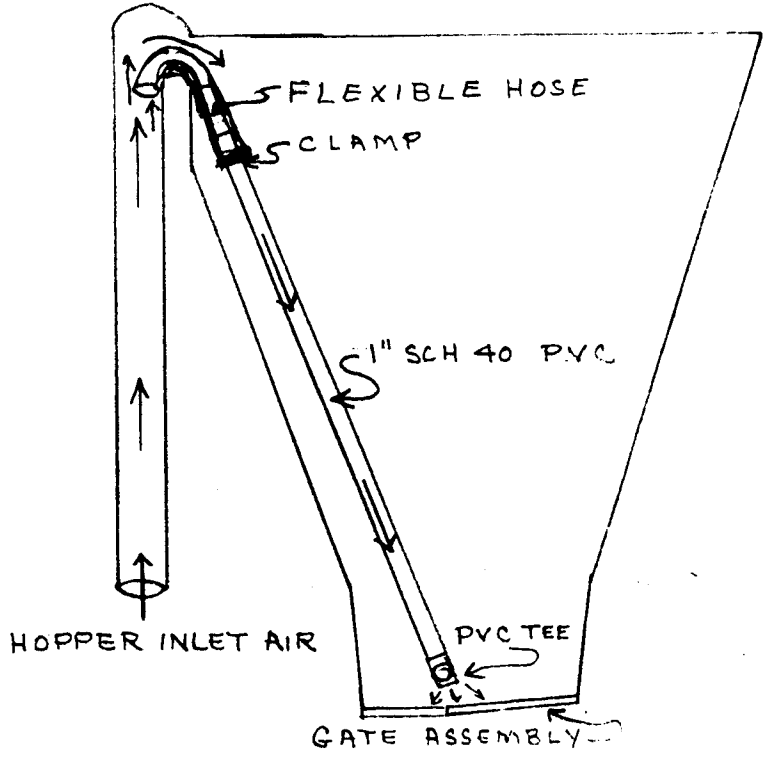

IV. Calibration

A. Swath checking:

The first step in aircraft calibration is to determine the swath width provided by the equipment on hand.

The best time to swath check an aircraft is when there is no wind. If there is any air movement, it is important that the aircraft be flown as directly into the wind as possible. The effective swath allowed should be no wider than that which can be obtained in a no-wind condition. When flying crosswind, the material will drift and cover a wider swath; however, the pilot cannot always fly crosswind conveniently, the wind will not always have the same velocity, and application is often done when there is no wind.

Swath checks should be conducted in open areas away from trees or buildings. To set up for swath checks; the catch pans (about 12" x 12" with 4-5" sides) should be placed perpendicular to the directions of flight. More accuracy is obtained when there are sufficient receptacles to place them at 5-foot intervals over a distance at least twice as long as the expected swath width. This is so that the total swath can be determined and the pilot may not always fly directly over the center.

To assist the pilots, it is helpful to use two flagmen, or cars with lights on, spaced 50 to 100 yards apart, aligned so the pilot will fly over the center of the receptacles. Pilots should be instructed to line up with the markers far enough away so that they will be in level flight at the operating speed, and at the required height during application. Application should begin at least 500 feet before reaching the receptacles and continue for about 1500 feet beyond. After closing the gate, they should continue flying straight and level for another 10 to 15 seconds.

Abrupt pull-ups, or turning too soon, will distort the deposit pattern. Flying at a height equal to the wingspan usually produces the widest effective swath. Flying at a height less than the wingspan usually produces a narrower effective swath. However, flying at a height much greater than the wingspan does not increase the swath appreciably.

The overall swath width is determined by visually examining each collecting pan for the presence of bait particles. The distance between pans which contain a minimum of 1 to 2 particles each is considered to be the overall swath width. The working swath should be 90% of the overall swath in order to provide a slight overlap to minimize "skips".

B. Calculation of acres per minute treated:

After determining the swath width and operating speed of the aircraft, calculate the acres per minute treated from the table below:

Flying Speed	ACRES PER MINUTE Working Swath Width (ft.)								
(mph)	50'	55'	60'	65'	70'	75'	80'	90'	100'
75	7.58	8.33	9.09	9.85	10.61	11.36	12.12	13.64	15.15
80	8.08	8.89	9.70	10.51	11.31	12.12	12.93	14.54	16.16
85	8.59	9.44	10.30	11.16	12.02	12.88	13.74	15.45	17.17
90	9.09	10.00	10.91	11.82	12.73	13.64	14.55	16.36	18.18
95	9.60	10.56	11.52	12.47	13.43	14.39	15.35	17.27	19.19
100	10.10	11.11	12.12	13.13	14.14	15.15	16.16	18.18	20.20
110	11.11	12.22	13.33	14.44	15.56	16.67	17.78	20.00	22.22
120	12.12	13.33	14.55	15.76	16.97	18.18	19.39	21.82	24.24
130	13.13	14.44	15.76	17.07	18.38	19.70	21.01	23.64	26.26
140	14.14	15.56	16.97	18.38	19.80	21.21	22.63	25.45	28.28
150	15.15	16.67	18.18	19.70	21.21	22.73	24.24	27.27	30.30

C. Calibration flights:

Acres per minute treated x desired rate per acre = lbs. of bait required in a 1-minute calibration flight:

1. Load aircraft hopper with 100-150 lbs. of material.
2. Operate aircraft at treatment altitude and speed with gate lever opened against the gate stop for 1 minute (use of a stopwatch increases accuracy).
3. After landing, drain hopper into suitable containers and determine lbs. of material applied.

   Note: Lbs. material placed in hopper - the lbs. material remaining after 1 minute calibration flight = lbs. material applied.

   For example, if the swath width was 50 feet and the flying speed was 120 mph, 12.12 acres/minute would be treated. If the desired rate/acre was 1.25 lbs., then 15.15 lbs. of material should be applied in a 1-minute calibration flight.

4. Adjust size of flow outlet(or orifice plates depending upon the equipment in use) if necessary until satisfied with the calibration results.
5. After achieving desired rate of application with a given outlet setting (or orifice plate size), the results should be confirmed with at least 1 additional calibration flight.

Note: For details regarding equipment and calibration, contact:

Tim Roland
USDA, APHIS, PPQ
Aircraft Operations
P.O. Box 787, Mission, Texas 78572

Phone FTS 734-3276, Ext. 76
Comm. 512-585-1645 Ext. 76

V. Glossary of Terms

Bridging - The interuption or stoppage of bait flow from the aircraft hopper into the bait spreader.

Carriers - Inert components of the bait formulation. Corn cob grits, peanut hulls, pregelled defatted corn and other materials are used as carriers in various bait formulations.

Category "D" Aircraft - Category D fixed wing aircraft as listed in Prospectus No. 65-M-APHIS (Feb. 1982) are as follows:

Cessna Ag(Carryall & AgPickup
Cessna AgTruck & AgWagons
Thrush Commander & New Air Tractor (Snow)
Quail Commander
Grumman AgCats (Long Wing)
Grumman AgCats (400-600 hp)
Grumman AgCats (200-300 hp)
Murray MA-1
Piper Brave
Piper Pawnee (230-260 hp)
Stearman (450-600 hp)
Weatherly

Corn cob grits - Milled corn cobs, usually sized to 12-30 mesh and often used as an inert carrier in IFA bait formulations.

Efficacy - The power to produce an effect; i.e. relative effectiveness of a bait toxicant.

Peanut buttering - the buildup of crushed pregelled defatted corn particles on the aft surfaces of aircraft spreaders. The particles smash upon impact with metal surfaces and tend to accumulate over a period of time. Consistency of this buildup resembles peanut butter.

Pregelled defatted corn - An inert carrier used to formulate several IFA baits. This carrier is characterized by its high level of absorption and feeding attraction by the ants.

Rancid - Baits which have a rank smell (or taste), usually from chemical change or decomposition.

Swath - The width of the treated area produced by one pass.

Toxicant - The active ingredient in a bait formulation. All fire ant baits contain an inert carrier (such as pregelled defatted corn), a feeding attractant (usually soybean oil), and the active ingredient or chemical that produces the toxic effect upon the ants that consume the bait.

Acknowledgements

Appreciation is extended to Mr. J. R. Stewart, Agricultural Engineer, USDA, APHIS, PPQ for providing the line drawings used in this publication and for reviewing the contents. We also thank Mrs. Bettie Gilbert for typing the manuscript.