United States Department of Agriculture

Cut Flowers and Greenery Import Manual

Some processes, equipment, and materials described in this manual may be patented. Inclusion in this manual does not constitute permission for use from the patent owner. The use of any patented invention in the performance of the processes described in this manual is solely the responsibility of the user. APHIS does not indemnify the user against liability for patent infringement and will not be liable to the user or to any third party for patent infringement.

The U.S. Department of Agriculture (USDA) prohibits discrimination in all its programs and activities on the basis of race, color, national origin, age, disability, and where applicable, sex, marital status, familial status, parental status, religion, sexual orientation, genetic information, political beliefs, reprisal, or because all or part of any individual's income is derived from any public assistance program. (Not all prohibited bases apply to all programs). Persons with disabilities who require alternative means for communication of program information (Braille, large print, audiotape, etc.) should contact USDA's TARGET Center at (202) 720-2600 (voice and TDD). To file a complaint of discrimination, write to USDA, Director, Office of Civil Rights, 1400 Independence Avenue, SW., Washington, DC 20250-9410, or call (800) 795-3272 (voice) or (202) 720-6382 (TDD). USDA is an equal opportunity provider and employer.

When using pesticides, read and follow all label instructions.

First Edition Issued 2014

Cut Flowers and Greenery

Contents

Figures *LOF-1*
Tables *LOT-1*
Introduction *1-1*
Procedures *2-1*
Reference *3-1*
Appendix A *A-1*
Appendix B *B-1*
Glossary *Glossary-1*
Index *Index-1*

Cut Flowers and Greenery

Figures

Figure 2-1 Diagram of a General Inspection Table *2-4*

Cut Flowers and Greenery

Tables

Table 1-1 How to Use Decision Tables *1-11*
Table 1-2 Where To Report Problems with the *Cut Flowers and Greenery Import Manual* *1-14*
Table 2-1 Where to Collect Information Needed *2-3*
Table 2-2 Categories of Consignments *2-8*
Table 2-3 Screening for Restrictions Concerning CITES, ESA, Federal Noxious Weeds, or Parasitic Plants *2-9*
Table 2-4 Cut Articles Protected by CITES or ESA, or are FNW or Parasitic Plants *2-9*
Table 2-5 Cut Articles NOT Protected by CITES or ESA, or NOT Listed as a FNW, or Parasitic Plant *2-10*
Table 2-6 Cut Articles, Additional Considerations *2-10*
Table 2-7 Residue Cargo Handling *2-11*
Table 2-8 Requirements for Cut Flowers and Greenery from Specific Countries *2-12*
Table 2-9 Articles Moving Directly from or Moving Through the Netherlands *2-13*
Table 2-10 Guide to the Pest Risk Level of Cut Flowers *2-14*
Table 2-11 Determine the Inspectional Unit *2-19*
Table 2-12 Determine the Inspectional Unit For Shipments That Have Different Genera *2-19*
Table 2-13 Determine the Sample Size of Each Inspectional Unit *2-20*
Table 2-14 Preparing Cut Flowers for Inspection *2-22*
Table 2-15 Action to Take When Inspecting Cut Flowers for Presence of Fruits *2-22*
Table 2-16 Quarantine Action to Take Based on Pest Findings *2-23*
Table 2-17 List of Flower and Country of Origin Combinations Eligible for Release *2-24*
Table 2-18 Determining Eligibility for Cut Flower Release *2-24*
Table 2-19 Decorative Branches or Stems from Host Plants of ALB or CLB *2-29*
Table 3-1 Acacia spp., Fabaceae *3-4*
Table 3-2 *Acer* spp. (maple), Aceraceae *3-5*
Table 3-3 *Aegilops* spp. (goatgrass) Poaceae *3-6*
Table 3-4 *Aesculus* spp. (buckeye, horse-chestnut), Hippocastanaceae *3-6*
Table 3-5 *Ajania pacifica*—a monotypic genus (yellow splash) Asteraceae *3-7*
Table 3-6 *Alnus* spp. (alder), Betulaceae *3-8*
Table 3-7 *Ananas* spp. (pineapple) Bromeliaceae *3-8*

Table 3-8 *Arecaceae* (alt. Palmae) (palms) *3-9*
Table 3-9 *Capsicum* spp. (pepper) Solanaceae *3-10*
Table 3-10 *Castanea* spp. (chestnut), Fagaceae *3-10*
Table 3-11 *Chaenomeles* spp. (flowering quince) Rosaceae *3-11*
Table 3-12 *Chamaedorea* spp. (palm fronds) Arecaceae *3-12*
Table 3-13 *Chrysanthemum spp.* (mum) Asteraceae *3-13*
Table 3-14 *Coffea* spp. (coffee) Rubiaceae *3-14*
Table 3-15 Cut Conifer Christmas Trees, Boughs, Wreaths, or Garlands from all Origins *3-15*
Table 3-16 Cut Conifer Christmas Trees, Boughs, Wreaths, or Garlands from Mexico *3-16*
Table 3-17 Cut Conifer Christmas Trees, Boughs, Wreaths, or Garlands from Canada *3-16*
Table 3-18 Cut Pine Christmas Trees or Branches *3-16*
Table 3-19 Cut PINE Christmas Trees or Branches from New Brunswick, Nova Scotia, or Prince Edward Island—Gypsy Moth Requirements *3-18*
Table 3-20 Cut PINE Christmas Trees or Branches from New Brunswick, Nova Scotia, or Prince Edward Island—Pine Shoot Beetle Requirements *3-19*
Table 3-21 Cut PINE Christmas Trees or Branches from Ontario or Quebec—Gypsy Moth Requirements *3-20*
Table 3-22 Cut PINE Christmas Trees or Branches from Ontario or Quebec—Pine Shoot Beetle Requirements *3-21*
Table 3-23 Cut Christmas Trees or Branches OTHER THAN Pine *3-22*
Table 3-24 *Cordyline* spp. Asparagaceae *3-23*
Table 3-25 *Cordyline* spp. Consignments Consisting of Solely Canes *3-23*
Table 3-26 *Cordyline* spp. Canes in Mixed Flower Bouquets *3-24*
Table 3-27 *Cotoneaster* spp., Rosaceae *3-25*
Table 3-28 Cycadaceae/Zamiaceae (cycads) *3-26*
Table 3-29 *Cydonia* spp. (flowering quince) Rosaceae *3-27*
Table 3-30 *Cynara* spp. (artichoke) Asteraceae *3-27*
Table 3-31 *Dracaena* spp. Asparagaceae *3-28*
Table 3-32 *Dracaena* spp. Canes only or Canes with Leaves from Costa Rica *3-29*
Table 3-33 *Dracaena* spp. Canes with or without Leaves, Shoots or Roots from Countries Other Than Costa Rica *3-30*
Table 3-34 *Fraxinus* spp. (ash), Oleaceae *3-31*
Table 3-35 *Gossypium* spp. (cotton) Malvaceae *3-31*
Table 3-36 *Hibiscus* spp. (giant mallow, rose mallow), Malvaceae *3-32*
Table 3-37 *Hippophae* spp. (sea buckthorn) Elaeagnaceae *3-33*
Table 3-38 *Ilex* spp. (holly) Aquifoliaceae *3-34*
Table 3-39 *Leucanthemella* spp. (high daisy, giant-daisy, max-chrysanthemum, Shasta daisy) Asteraceae *3-35*
Table 3-40 Loranthaceae (all genera of mistletoe) *3-36*
Table 3-41 *Malus* spp. (apple), Rosaceae *3-36*
Table 3-42 *Musa* spp. (banana, dwarf banana, flowering banana,

plantain) *3-37*
Table 3-43 *Nepenthes* spp. (pitcher plant) Nepenthaceae *3-38*
Table 3-44 *Nipponanthemum* spp. (nippon-daisy, nipon-chrysanthemum) Asteraceae *3-39*
Table 3-45 *Oryza sativa* (rice) Poaceae *3-41*
Table 3-46 *Pelargonium* spp. (scented geraniums) Geraniaceae *3-42*
Table 3-47 *Phoenix* spp. (date palm) Arecaceae *3-43*
Table 3-48 *Physalis* spp. (ground cherry, Chinese-lantern plant, Japanese-lantern) Solanaceae *3-44*
Table 3-49 Poaceae (all genera and species of grasses) *3-45*
Table 3-50 *Polypodiophyta* (Ferns) *3-46*
Table 3-51 Proteaceae (protea) *3-47*
Table 3-52 *Prunus* spp., Rosaceae *3-49*
Table 3-53 *Pyracantha* spp. (firethorn), Rosacea *3-49*
Table 3-54 *Pyrus* spp. (pear) Rosaceae *3-50*
Table 3-55 *Ricinus communis* (castor, ricin) Euphorbiaceae *3-50*
Table 3-56 Rutaceae (all genera and species of the citrus subfamilies Aurantioideae, Rutoideae, and Toddalioideae) *3-51*
Table 3-57 *Salix* spp. (osier, willow), Salicaceae *3-52*
Table 3-58 *Sarracenia* spp. (pitcher plant) Sarraceniaceae *3-53*
Table 3-59 *Sorghum bicolor* (broomcorn) Poaceae *3-54*
Table 3-60 *Triticum* spp. (wheat and intergeneric crosses) Poaceae *3-54*
Table 3-61 *Ulmus* spp. (elm), Ulmaceae *3-55*
Table 3-62 *Viburnum* spp. (Guelder-rose, Japanese snowball, laurustine, snowball, summer snowflake) Caprifoliaceae *3-56*
Table 3-63 *Viburnum* spp. from Afghanistan, Austria, Belgium, Bulgaria, China, Croatia, Cyprus, Czech Republic, Democratic People's Republic of Korea, Denmark, Estonia, Finland, France, Germany, Greece, Hungary, Indonesia, Italy, Japan, Latvia, Lithuania, Luxembourg, Malta, Poland, Portugal, Republic of Korea, Madagascar, Malaysia, Myanmar, Philippines, Romania, Slovakia, Slovenia, Spain, Sweden, Switzerland, Taiwan, or Vietnam *3-56*
Table 3-64 *Viburnum* spp. from Australia or New Caledonia *3-57*
Table 3-65 *Viburnum* spp. from Ireland or United Kingdom *3-57*
Table 3-66 *Viburnum* spp. from the Netherlands *3-58*
Table 3-67 *Viburnum* spp. from New Zealand *3-59*
Table 3-68 *Viburnum* spp. from Countries Other Than Those Listed Above *3-59*
Table 3-69 *Zea mays* (corn and closely related plants) Poaceae *3-60*
Table A-1 How to Process Red-and White-Labeled Packages (PPQ Form 599) *A-4*
Table A-2 How to Process Green- and Yellow-Labeled (PPQ Form 505) Packages *A-7*
Table A-3 Obtain a Copy of the Controlled Import Permit (PPQ Form 597) *A-8*
Table A-4 Processing Controlled Import Permits *A-9*

Chapter

1

Introduction

Contents

Purpose **1-2**
Scope **1-2**
Users **1-4**
Related Documents **1-4**
- Convention on International Trade in Endangered Species of Wild Fauna and Flora **1-5**
- Endangered Species Act **1-5**
- Plant Protection Act **1-5**
- Code of Federal Regulations **1-6**
- Treatment Manual **1-10**

Application **1-10**
Conventions **1-10**
- Advisories **1-10**
- Boldface **1-10**
- Bullets **1-10**
- Change Bars **1-11**
- Chapters **1-11**
- Contents **1-11**
- Control Data **1-11**
- Decision Tables **1-11**
- Examples **1-11**
- Footnotes **1-12**
- Heading Levels **1-12**
- Hypertext Links to Figures, Headings, and Tables **1-12**
- Indentions **1-12**
- Italics **1-12**
- Numbering Scheme **1-12**
- Transmittal Number **1-13**

Using the Manual **1-13**
- Reporting Problems With or Suggestions for the Manual **1-13**
- Manual Updates **1-14**
- Ordering Additional Manuals and Revisions **1-14**

Purpose

The *Cut Flowers and Greenery Import Manual* provides the background, procedures, and reference tables for regulating the fresh, cut portion of the plant when it is imported for decoration or ornamentation, and for protecting plants threatened with extinction due to trade in those plants or their derivatives.

The articles from the countries of origin listed in this manual are regulated because just one destructive pest might be enough to start a pest outbreak that can cause millions of dollars of damage to crops, trees, flowers, or lawns. By their destructiveness, pests can increase the price and reduce the quality of food, lower property values, and ruin recreational areas. The extinction of just one plant species does away with the aesthetic, ecological, educational, historical, recreational, commercial, and scientific value of our world.

Scope

What the Manual Covers

The *Cut Flowers and Greenery Import Manual* covers the fresh, cut portion of the plant including the cut flower and greenery (as well as branches or stems and any fruits attached) for decoration or ornamentation, and are **not** intended for eating or growing.

The manual is divided into the following chapters:

- *Introduction*
- *Procedures*
- *Reference*

The manual also includes *appendixes*, a *Glossary*, and an *Index*.

The *Introduction* chapter contains basic information about the manual. This chapter includes the manual's purpose, scope, users, and application, a list of related documents providing the authority for the manual's content, directions about how to use the manual, and the conventions (unfamiliar or unique symbols and highlighting) appearing throughout the manual.

The *Procedures* chapter provides the prerequisites and general directions for sampling, inspecting, determining pest risk, and regulating fresh, cut articles; and the protocol for the National Cut Flower Release Program (NCFRP).

The *Reference* chapter identifies the prohibitions and restrictions that apply to the admissibility of fresh, cut articles and provides the authority for the regulatory action.

The *appendixes* contain supplementary information **not** appropriate for other topics, explanations and elaborations. The *appendixes* contains information ***not*** essential to the manual, but helpful to the user as well as information that interrupts the application of the data or makes the data more difficult to follow.

The *Glossary* defines specialized words, abbreviations, and acronyms associated with regulating fresh, cut articles.

The *Index* contains topics and links or page numbers for quick reference.

What the Manual Does Not Cover

The *Cut Flowers and Greenery Import Manual* **does not** cover plant material intended for planting or growing, unprocessed seeds intended for food or animal feed, fresh fruits, herbs, or vegetables, or processed plant material and articles manufactured from plants or plant products. Plant materials **not** covered by this manual are listed below and may include a reference in which information can be found about inspecting, regulating, and clearing such commodities.

- Fresh, cut articles in quarters on carriers (see the *Manual for Agricultural Clearance*)
- Fresh, cut articles in transit to Canada
- Fresh, cut articles moving interstate (see the territorial regulations for regulatory actions)
- Fresh, cut flowers, fronds, fruits, fruit pods, leaves, roots, seed heads, seed pods, and stems for food (human consumption) or utilized as herbs[1] (see the FAVIR database)
- Fresh fruits, herbs, or vegetables for food (human consumption) (see the FAVIR database)
- Plant material imported for planting or growing, including forced bulbs, potted plants, or rooted plants (*see* the *Plants for Planting Manual*)
- Processed (bleached, chemically treated, dried, or dyed) plant material[2] and articles (decorative or ornamental) manufactured from plants or plant products (see *Miscellaneous and Processed Products Import Manual*)

1 Such as banana flowers, chrysanthemum greens, cockscomb inflorescences, fiddle heads, roselle calyxes, and squash flowers.
2 Such as cones, flowers, fronds, fruits, fruit pods, leaves, roots, seed heads, seed pods, and stems.

- Unprocessed seeds for food (human consumption) (see the *Seeds Not for Planting Manual*)
- Unprocessed seeds for animal feed (see the *Animal Product Manual*)

Users

The *Cut Flowers and Greenery Import Manual* is written for regulatory officials working at airports, seaports, and land borders:

- Customs and Border Protection (CBP) officers
- CBP Agriculture Specialists
- Plant Protection and Quarantine (PPQ) officers

The users' experience levels will vary, but the assumption is that regulatory officials have, at minimum, a working knowledge of PPQ's import manuals in order to make regulatory decisions.

Domestic and international PPQ officers and other regulatory officials reference this manual to answer import-related questions asked by the public, importers, brokers, and other interested parties.

Related Documents

Authority

Enabling legislation provides the authority to carry out the mission of protecting American agriculture from plant pests. Legislative acts are the fundamental authority granted by Congress to the Secretary of Agriculture to promulgate regulations to protect American agriculture. The regulatory authority for taking the actions listed in this manual is contained in the following legislative acts and multinational treaty:

- *Convention on International Trade in Endangered Species of Wild Fauna and Flora* on page 1-5
- *Endangered Species Act* on page 1-5
- *Plant Protection Act* on page 1-5

Other documents that include information related to importing fresh, cut articles are listed below and followed by their details:

- *Code of Federal Regulations* on page 1-6
- *Treatment Manual* on page 1-10

Convention on International Trade in Endangered Species of Wild Fauna and Flora

The *Convention on International Trade in Endangered Species of Wild Fauna and Flora (CITES)* is a multinational treaty regulating the importation of listed species of wild fauna and flora. CITES provides three appendices for listing plants. These appendices, in order of their restrictiveness, are as follows:

1. CITES Appendix I—any genus, species, subspecies, or variety globally threatened with extinction through trade.
2. CITES Appendix II—any taxon (the entire family—all genera and all species) that **must** be regulated in order to avoid the threat of extinction through trade.
3. CITES Appendix III—any species, subspecies, or variety listed by one country in order to enlist the cooperation of other countries to reenforce domestic conservation measures by regulating trade.

Trade in protected species of CITES plants is monitored. More specifically, commercial trade in CITES Appendix I plants taken from the wild is **prohibited**, and commercial trade in CITES Appendix II plants is allowed **only** if that trade is **not** detrimental to the survival of the species in the wild.

Endangered Species Act

The *Endangered Species Act (ESA)* provides for the protection of listed species in two categories. These categories, listed in order of their restrictiveness, are as follows:

1. Endangered—any species, subspecies, or variety in danger of extinction throughout all or a significant portion of its range.
2. Threatened—any species, subspecies, or variety likely to become endangered within the foreseeable future throughout all or a significant portion of its range.

In general, ESA **prohibits** the trade in endangered and threatened species. Importing threatened species may be allowed for scientific research, propagation enhancement, survival enhancement, educational exhibition, display at botanical gardens and arboretums, and other activities consistent with the purposes or policy of ESA.

Plant Protection Act

The *Plant Protection Act of 2000 (PPA)* provides the authority to prohibit or restrict imports, exports, or interstate movement of plant pests, plants, plant products, noxious weeds, biological control agents, and means of conveyance.

Code of Federal Regulations

The *Code of Federal Regulations (CFRs)* provide the authority for the regulatory action taken and are enforced by CBP and PPQ. The restrictions and prohibitions listed in this manual are covered by the following *Title 7* and *Title 50* parts:

7 CFR 318.13

7 CFR 318.13 Subpart—Regulated Articles From Hawaii and the Territories provides the following:

- Restricts and prohibits the interstate movement of plants, plant parts, and products intended for both propagative and nonpropagative purposes originating in Hawaii and the territories and moving to other parts of the United States
- Gives instructions on the clearance of carriers, cargo, passenger baggage, and mail

7 CFR 319.8

7 CFR 319.8 Subpart—Foreign Cotton and Covers provides the following:

- Pests of concern—pink bollworm (*Pectinophora gossypiella*) and potato cyst nematodes (*Globodera rostochiensis* and *Globodera pallida*)
- Prohibits cottonseed, seed cotton, and fresh, cut cotton articles
- Restricts the entry of all unmanufactured parts of the cotton plant (lint, linters; cottonseed cake, hulls and meal; cotton gin and thread waste); secondhand burlap, covers, and other fabrics that have held cotton, grain, field seed, underground crops, and meats

7 CFR 319.15

7 CFR 319.15 Subpart—Sugarcane provides the following: prohibits (from all countries) sugarcane and its related products including cuttings, canes, leaves, and bagasse; restricts bagasse and related sugarcane products into Guam

7 CFR 319.19

7 CFR 319.19 Subpart—Citrus Canker and other Citrus Diseases provides the following:

- Disease of concern—citrus canker (*Xanthomonas citri*)
- Prohibits all plant parts of citrus and related genera **except** fruits and seeds

7 CFR 319.24

7 CFR 319.24 Subpart—Corn Diseases provides the following:

- Diseases of concern—*Peronospora maydis*, downy mildew (*Sclerospora sacchari*), *Physoderma* diseases of maize, *Physoderma zeae–maydis*, corn brown spot (*Physoderma maydis*)
- Prohibits and restricts all parts of corn and corn relatives (including seeds) from specific countries

7 CFR 319.37

7 CFR 319.37 Subpart—Plants for Planting provides the following:

- Lists the approved growing media for propagative materials
- Regulates plants and plant parts capable of propagation, including branches with or without flowers imported as cut flowers, greenery, or decorative materials such as wreaths from the following genera or family: *Chaenomeles*, *Cydonia*, *Eucalyptus*, *Malus*, Poaceae, *Prunus*, *Pyrus*, *Salix*, and *Vitis*

7 CFR 319.41

7 CFR 319.41 Subpart—Indian Corn or Maize, Broomcorn, and Related Plants provides the following:

- Pest of concern—European corn borer (*Ostrinia nubilalis*)
- Prohibits or restricts the entry of corn, broomcorn, and related plants

7 CFR 319.55

7 CFR 319.55 Subpart—Rice provides the following:

- Diseases of concern—downy mildew (*Sclerospora macrospora*), leaf smut (*Entyloma oryzae*), blight (*Oospora oryzetorum*), glume blotch (*Melanomma glumarum*)
- Prohibits or restricts rice seeds, paddy rice, rice straw, and rice hulls

7 CFR 319.56

7 CFR 319.56 Subpart—Fruits and Vegetables provides the following:

- Includes fresh, cut articles imported for decoration when fresh fruits are attached, e.g., pineapples (*Ananas* spp.) used as decorative articles
- Pests of concern—fruit and melon flies (Tephritidae) and other quarantine-significant pests not known to occur in the U.S.
- Restricts frozen fruits and vegetables
- Restricts or prohibits fresh fruits and vegetables (including herbs) from all countries

7 CFR 319.59

7 CFR 319.59 Subpart—Wheat Diseases provides the following:

- Includes products of the milling process, articles manufactured from wheat plants or plant parts if their use could serve to disseminate the spores of Karnal bunt or other diseases, and fresh, cut plant parts for decorative purposes
- Diseases of concern—Karnal bunt (*Tilletia indica*) and other diseases
- Prohibits and restricts plants, plant parts and products of wheat and wheat relatives from countries infested with Karnal bunt or other diseases

7 CFR 319.73

7 CFR 319.73 Subpart—Coffee provides the following:

- Disease of concern—rust disease caused by coffee leaf rust (*Hemileia vastatrix)*
- Pest of concern—coffee berry borer (*Hypothenemus hampei*)
- Prohibits green (unroasted) and insufficiently roasted coffee beans and empty sacks previously used for unroasted coffee from all areas of the world into Hawaii and Puerto Rico

7 CFR 319.74

7 CFR 319.74 Subpart—Cut Flowers provides the following: restricts or prohibits importing fresh, cut flowers, but exempts dried, bleached, dyed, or chemically treated decorative plant materials from the definition of cut flowers

7 CFR 330

7 CFR 330 Subpart—Federal Plant Pest Regulations provides the following:

- Pest of concern which means any living stage of any insects, mites, nematodes, slugs, snails, protozoa, or other invertebrate animals, bacteria, fungi, other parasitic plants or reproductive parts thereof, viruses, or any organisms similar to or allied with any of the foregoing, or any infectious substances that can directly or indirectly injure or cause disease or damage in any plants or parts thereof, or any processed, manufactured, or other products of plants; or any living stage of insects, mites, nematodes, slugs, snails, protozoa, or other invertebrate animals, bacteria, fungi, other parasitic plants or reproductive parts thereof, viruses, or any organisms similar to or allied with any of the foregoing, or any infectious substances of the aforementioned that are not genetically engineered as defined in 7 CFR 340.1 that can directly or indirectly injure or cause disease or damage in any plants or parts thereof, or any processed, manufactured, or other products of plants

- Restricts the entry of miscellaneous cargo, garbage, plants, carriers, or any item that is or may act as a plant pest carrier
- Restricts the movement of soil from Hawaii, Puerto Rico, and the U.S. Virgin Islands to the United States

7 CFR 352

7 CFR 352 Subpart—Plant Quarantine Safeguard Regulations provides the following: restricts importing all items that are either prohibited or restricted by Subparts 319 or 330 and are subject to safeguard regulations when:

- Brought in for a temporary stay and unloading is not intended, i.e., ships' stores
- Intended unloading and entry at a subsequent port (residue cargo)
- Refused entry under Subparts 319 or 330
- Unloaded for transportation and exportation (T&E)
- Unloaded for transshipment and direct exportation

7 CFR 360

7 CFR 360 Subpart—Noxious Weed Regulations provides the following: lists weeds that are noxious and allows importing seed of listed weeds **only** under an import permit

NOTICE

If you are unsure whether a plant is a Federal noxious weed (FNW), refer to the *Federal Noxious Weed List*.

50 CFR 17.12

50 CFR 17.12 Subpart—Endangered and threatened plants provides the following: lists all plant species that have been determined by the United States Fish and Wildlife Service (FWS)–Department of the Interior to be endangered or threatened

50 CFR 23.23

50 CFR 23.23 Subpart—endangered species convention provides the following: lists all plant and animal species placed in Appendix I, Appendix II, or Appendix III

50 CFR 24.12

50 CFR 24.12—Designated ports provides the following: list of U.S. Department of Agriculture (USDA) ports designated for the import, export, or reexport of plants listed in 50 CFR 17.12 or 50 CFR 23.23

Treatment Manual

The *Treatment Manual* provides treatment details when a commodity **must** be treated as a condition of entry or based on pest findings.

Application

The *Cut Flowers and Greenery Import Manual* informs CBP officials and PPQ officers how to regulate commercial and noncommercial shipments of fresh, cut articles of the florist trade.

Conventions

Conventions are established by custom and are widely recognized and accepted. Major conventions used in this manual follow.

Advisories

Advisories are used throughout the *Cut Flowers and Greenery Import Manual* to bring important information to your attention. Please carefully review each advisory. The definitions coincide with American National Standards Institute (ANSI) and are in the format shown below.

DANGER

Danger indicates imminent risk of death or serious injury.

WARNING

Warning indicates possible risk of serious injury.

CAUTION

Caution indicates minor to moderate risk of injury.

NOTICE

Notice indicates important information or Agency policy.

SAFETY

Safety indicates general instructions or reminders related to safety.

Boldface

Boldface type is used to emphasize important words throughout this manual. These words include: **always, cannot, do not, does not, except, lacks, never, no, nor, not, only, other than.**

Bullets

Bulleted lists indicate that there is **no** order to the listed information.

Change Bars

A black change bar (see left margin) is used to indicate a change and appears on the revised page. Unfortunately, change bars **do not** always appear when text is merely deleted. Change bars from the previous update are deleted when the chapter or appendix is revised.

Chapters

This manual contains the following chapters: *Introduction*, *Procedures*, and *Reference*.

Contents

Every chapter has a table of contents listing the heading titles within.

Control Data

Control data are located at the top and bottom of each page to help users keep track of where they are in the manual and to be aware of updates to the manual. At the top of the page is the chapter title and first-level heading. At the bottom of the page is the transmittal number (month, year, number), title of the manual, page number, and unit responsible for the manual's content.

Decision Tables

Decision tables are used throughout the manual. The first and middle columns in each table represent conditions; and the second-to-last column represents the action to take after all conditions listed for that row are considered and the final column is the authority used to determine the action. Begin with the column headings and move left to right, if the condition **does not** apply, continue one row at a time until you find the condition that **does** apply.

Table 1-1 How to Use Decision Tables

If you:	And the condition applies:	Then:
Read this column first	Continue in this cell	TAKE the action listed in this cell
Find the previous condition **did not** apply, read this column cell	Continue in this cell	TAKE the action listed in this cell

Examples

Examples are used to clarify a point by applying it to a real-world situation.

EXAMPLE Examples are graphically placed boxes within the text as a means of visually separating information from other information contained on the page. Examples will **always** appear in a box.

Footnotes

Footnotes comment on or cite a reference to text and are referenced by number. The footnotes used in this manual include figure footnotes, general text footnotes, and table footnotes. General text footnotes are located at the bottom of the page.

When space allows, figure and table footnotes are located directly below the associated figure or table. However, for figures or tables covering the length of the page, the footnote numbers and footnote text cannot be listed on the same page. If a table or figure continues beyond one page, the associated footnotes will appear on the last page below the figure or table.

Heading Levels

Within each chapter and section there are three heading levels. The first heading is indicated by a horizontal line, and the heading continues directly below and across both the left and right columns. The second heading is in the right-hand column with the text beginning below. The third heading is in the left column and the text is in the right column.

Hypertext Links to Figures, Headings, and Tables

Figures, headings, and tables are hypertexted using cross-references in the body of the manual and are highlighted in boldface, blue type.

EXAMPLE See *Table 1-2* on page 1-14 in the *Introduction* to determine where to report problems with this manual.

Indentions

Entry requirements summarized from CFRs, import permits, or policies are indented on the page.

Italics

The following items are italicized throughout this manual:

- Cross-references to headings and titles
- Publication names
- Scientific names of commodities

Numbering Scheme

A two-level numbering scheme is used in this manual for pages, figures, and tables. The first number represents the chapter. The second number represents the page, table, or figure. Dashes are used in page numbering to differentiate page numbers from decimal points.

Transmittal Number

The transmittal number contains the month, year, and a consecutively issued number (beginning with -01 for the first edition and increasing consecutively for each update to the edition). The transmittal number is only changed when the specific chapter, appendix, glossary, figure, table, or index is updated. If **no** changes are made, the transmittal number remains unchanged. The transmittal number only changes for the entire manual when a new edition is issued or changes are made to the entire manual.

EXAMPLE 05/2012-50 is the transmittal number for this update and is located in the control data on the pages in this chapter.

05 is the month the update was issued
2012 is the year the update was issued
50 is the number (the original new edition was 01, plus 35 updates)

Using the Manual

Review the contents of this manual to get a feel for the scope of covered material. Glance through the section you will be using, and familiarize yourself with the organization of the information. Use the table of contents to find the information you need. If the table of contents is **not** specific enough, turn to the *Index* to find the topic and corresponding page number.

Reporting Problems With or Suggestions for the Manual

Use *Table 1-2* on page 1-14 to determine where to report problems, disagreements, or improvements directly affecting the contents of the *Cut Flowers and Greenery Import Manual*.

Table 1-2 Where To Report Problems with the *Cut Flowers and Greenery Import Manual*

If you:	Then:
Are **not** able to access the online manual	CONTACT PPQ's Manuals Unit by email (bruce.n.attavian@aphis.usda.gov) or call 240-529-0355
Have a situation requiring an immediate response regarding a procedure or regulatory action	CBP CONTACT the Field Office Agriculture Liaison through the chain of command
	PPQ CONTACT Customer Service at 800-877-5990 or 301-851-2046
Have a suggestion for improving the formatting of the manual (e.g., design, layout, composition, grammar, or spelling)	SEND an email to bruce.n.attavian@aphis.usda.gov
Disagree with the admissibility of a commodity	CBP CONTACT the Field Office Agriculture Liaison through the chain of command
	PPQ CONTACT Customer Service at 800-877-5990 or 301-851-2046
Disagree with policy or procedures	CBP CONTACT the Field Office Agriculture Liaison through the chain of command

Manual Updates

The PPQ Manuals Unit issues and electronically maintains manuals on the Manuals Unit Web site. These online manuals contain the most up-to-date information.

Immediate update revisions to the manual are issued and distributed via email to CBP Agriculture Specialists and all PPQ employees.

Each immediate update contains the following information:

- Link to access and download the on-line manual
- List of the revised pages
- Purpose of the revision(s)
- Transmittal number

Ordering Additional Manuals and Revisions

Although using the online manuals is the preferred method, APHIS employees may order paper copies of manuals from the APHIS Printing, Distribution, and Mail Services Center in Riverdale, Maryland. Visit the Riverdale Print Shop Web site for detailed information and printing costs. The Manuals Unit is **not** responsible for printing costs.

Chapter 2

Procedures

Contents

Introduction **2-1**
Preparation **2-2**
- Information Needed **2-2**
- Inspectional Area Needed **2-3**
- Materials Needed **2-5**
- Regulatory Action **2-5**

General Inspection Procedures **2-7**
- Step 1: Determine the Category of the Consignment **2-8**
- Step 2: Determine Articles' Regulatory Status **2-8**
- Step 3: Determine Whether to Inspect or Authorize Movement **2-11**
- Step 4: Check for Import Requirements **2-11**
- Step 5: Identify the Level of Pest Risk **2-13**
- Step 6: Determine the Sample Size **2-18**
- Step 7: Inspect the Cut Flowers and Foliage **2-20**
- Step 8: Take Regulatory Actions Based on Inspection Results **2-22**

Special Procedures **2-23**
- Protocol for The National Cut Flower Release Program **2-23**
- Precleared Flowers and Greenery **2-25**
- Articles from Countries Infested with Light Brown Apple Moth (LBAM) **2-27**
- Articles from Countries Where Asian Longhorned Beetle and/or Citrus Longhorned Beetle Populations Are Present **2-28**
- Identification of Protected Plants, Noxious Weeds, or Parasitic Plants **2-29**

Introduction

The information presented in the *Procedures* chapter includes the prerequisites and general inspection procedures for sampling, inspecting, determining pest risk, and regulating fresh, cut articles; and the protocol for the National Cut Flower Release Program (NCFRP).

Preparation

The information presented under *Preparation* is a prerequisite to the *General Inspection Procedures*. Be sure to complete the preparatory tasks described below.

Information Needed

Investigate and be creative when collecting the necessary information. Refer to Table 2-1 on page 2-3 for sources of information. HOLD all shipments until you have the needed information.

- Destination of the cut articles where they will be used (**not always** the port of entry (POE))
- Intended use of cut articles (how the fresh, cut articles are to be used determines what restrictions apply, e.g., chrysanthemum stems could be used as greenery or cut flowers, as herbs or vegetables, or as parts to grow the plants. When the intended use of fresh, cut articles is unknown, regulate them as if they were intended for planting or growing and use the *Plants for Planting Manual*
- Origin of the cut articles (where they were grown or harvested, **not** the port of lading)
- Presence of preclearance form (PPQ Form 203)

NOTICE

Currently **only** Chile and Jamaica have preclearance programs for cut flowers and greenery.

- Presence or absence of required import permits and foreign phytosanitary certificates
- Scientific or common name of the cut articles: refer to the *Germplasm Resources Information Network (GRIN)*
- Size and kind of shipment: commercial or noncommercial
  - Commercial or larger quantity shipments are imported for resale or for profit
  - Noncommercial or smaller quantity shipments are imported for personal use and **not** for profit (usually enter as passenger baggage, trade samples, household goods, and mail)

Ensure the information is accurate. Manifests often show the port or airport of lading, but **not** the origin of the articles; therefore, you may need to check other documents for the country of origin. Consult reference materials and PPQ specialists (botanist, entomologist, and plant pathologist) through proper channels when you are **not** sure what is being imported.

EXAMPLE An air waybill of lading shows 15 boxes of daffodils, *Narcissus* spp., being imported from the Netherlands; but when you inspect the flowers, you notice the boxes have printing that says the flowers were grown in Israel.

Table 2-1 Where to Collect Information Needed

If the shipment is:	Then get information from:
Commercial (for resale or for profit)	◆ Carrier documents (air waybills and shipping papers) ◆ Computers and computer printouts ◆ Foreign phytosanitary certificates ◆ Interviews with importers, brokers, freight forwarders, or other representatives of the importer ◆ Invoices (obtained from importer or broker) ◆ Labels ◆ Manifests and other Customs and Border Protection (CBP) forms ◆ Notices of arrival ◆ Packing lists ◆ Permits (PPQ, Convention on International Trade in Endangered Species of Fauna and Flora (CITES), Endangered Species Act (ESA))
Noncommercial (**not** for sale **nor** profit)	◆ Declarations (oral or written CBP declaration) ◆ Documents (such as a sales receipt) ◆ Foreign phytosanitary certificates ◆ Labels (information written on the packaging) ◆ Interviews with importers ◆ Permits

Inspectional Area Needed

In order to effectively inspect, you need the following inspection area and operational supports:

- Designated Inspection Area on page 2-3
- Inspection Surface on page 2-4
- Lighting on page 2-5

Designated Inspection Area

POEs where cut flower shipments are regularly received should have a designated area for inspectional operations. The designated inspection area should be as follows:

- Adequately ventilated with fans; wherever possible, fans should be permanently mounted either on the floor or wall
- Designated USDA–APHIS office space, with a secured door, telephone, desk, chair, and sufficient space for USDA–APHIS files; USDA–APHIS shall be provided keys for access to the inspection area

- Easily accessible for inspectors, i.e., **not** blocked by cargo or equipment
- Secure area capable of being locked with a USDA–APHIS seal for storing quarantined cut flowers, ideally located within the warehouse or cooler[1]

Inspection Surface

POEs where cut flower shipments are regularly received should have an inspection surface that meets the following requirements:

- Sturdily built, ideally 36 to 40" high, with a minimum depth and width of 48" x 96"
- Built with **no** raised edges on the table surface
- Kept clean, dry, and smooth
- Located outside the flow of warehouse traffic, i.e., pedestrians, forklifts, pallet jacks, etc.
- Painted white or covered with white laminate for greatest visibility
- Used **only** for agricultural inspection (**never** used for any other purpose, *i.e., cargo storage*)

See Figure 2-1 below for a diagram of a general inspection table.

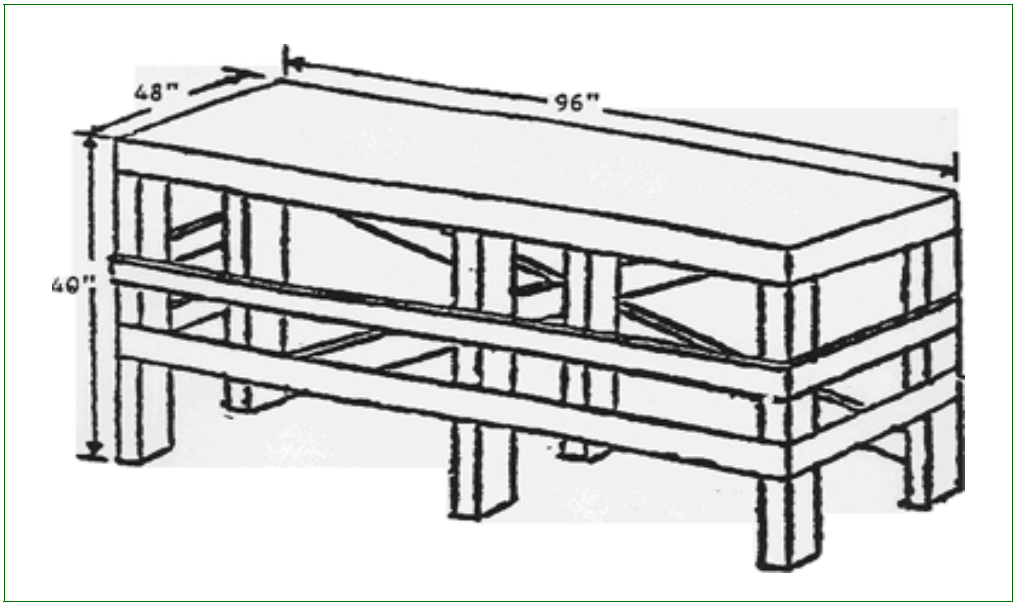

Figure 2-1 Diagram of a General Inspection Table

1 When a secure area is **not** feasible, arrangements may be made to seal infested material in another manner and/or location.

Lighting

Good, strong lighting is necessary to inspect cut flowers. Fluorescent lighting is the best. Where possible, supplement the overhead fluorescent lighting with a table lamp with magnifier. See the following optimum lighting recommendations for inspecting cut flowers:

- Install two 96-inch fluorescent bulbs centered directly over each 48 x 96-inch section of inspection surface
- Install light fixtures 44 to 56 inches above the inspection surface
- **Do not** install light fixtures more than 8 feet above the floor surface

Materials Needed

When inspecting, have the following materials available:

- Alcohol (for insect preservation)
- Bags, small brown paper
- Brush, small and probe (for picking up insects)
- Flashlight
- Gloves, plastic or rubber (for inspecting treated flowers and foliage)
- Hand lens
- Knife
- Online Manuals
- Paper clips (for interceptions)
- PPQ Form 309 online
- Regulatory stamps (Hold, Released; Treated & Released; Authorize Shipment To; Released for Export; and Inspected & Released)
- Vials
- White banner paper

Regulatory Action

Once you have all the information needed to make a regulatory decision, take one of the following actions:

- Authorize Shipment on page 2-6
- Hold on page 2-6
- Prohibit Entry on page 2-6
- Release on page 2-7

Authorize Shipment

The regulatory action to AUTHORIZE SHIPMENT may be authorized under Customs bond (also called in-transit) and allows the item to move to another port where CBP or PPQ have personnel to inspect or treat the item. Authorize shipment if the:

- Cargo is moving to an approved treatment facility if you would prescribe proper safeguards to prevent any pest escape
- Cargo remains on board the carrier as residue cargo and the destination is authorized for the regulated cargo
- Conditions of the import permit require that the regulated cargo be cleared or treated at a specific POE, e.g., Controlled Import Permit[2] material authorized shipment to the National Plant Germplasm and Biotechnology Laboratory in Beltsville, Maryland
- Receiving CBP or PPQ office agrees to clear the cargo

Hold

The regulatory action to HOLD maintains control of the cargo while:

- Awaiting a copy of an approved import permit
- Awaiting decision by importer to apply for required import permit to comply with the PPQ Form 523, Emergency Action Notification (EAN)
- Awaiting final identification of an URGENT cargo interception
- Awaiting importer or representative to make cargo accessible for inspection
- Awaiting inspection of the cargo
- Collecting information to make a regulatory decision

Prohibit Entry

Take the regulatory action PROHIBIT ENTRY if the plants or plant products are:

- Imported and the importer refuses to comply with the conditions of entry
- Infested with a pest for which a treatment **does not** exist or is **not** feasible

NOTICE

Infested articles intercepted in baggage are impractical to adequately safeguard, to send for identification, and to arrange for required treatments. Refuse entry unless extenuating circumstances exist. Travelers assume all incurred costs, including shipping to final destination.

2 A valid Departmental Permit is an acceptable form of Controlled Import Permit.

- Infested with plant pests and the importer refuses to treat the commodities
- Prohibited and **not** authorized by a Controlled Import Permit[3]

Release

Take the regulatory action to RELEASE after ensuring:

- All import permit requirements have been met
- All required documents are in order (CITES, import permits, foreign phytosanitary certificates)
- Precleared articles are accompanied by PPQ Form 203
- Material is admissible after inspection
- Quarantine pests have **not** been found
- Required treatments, if any, have been completed

Release Under the National Cut Flower Release Program

Take the regulatory action to release under the National Cut Flower Release Program (NCFRP) when a flower and country of origin combination that is eligible for release is **not** selected as the flower of the day. This regulatory action is **only** used at participating POEs for importing high-volume, low-risk, cut flowers (*see* Protocol for The National Cut Flower Release Program on page 2-23).

General Inspection Procedures

Listed below is an overview of the steps involved in sampling, inspecting, determining pest risk, and regulating fresh, cut articles and greenery. Details of each step follow the overview.

- *Step 1: Determine the Category of the Consignment*
- *Step 2: Determine Articles' Regulatory Status*
- *Step 3: Determine Whether to Inspect or Authorize Movement*
- *Step 4: Check for Import Requirements*
- *Step 5: Identify the Level of Pest Risk*
- *Step 6: Determine the Sample Size*
- *Step 7: Inspect the Cut Flowers and Foliage*
- *Step 8: Take Regulatory Actions Based on Inspection Results*

3 A valid Departmental Permit is an acceptable form of Controlled Import Permit.

Step 1: Determine the Category of the Consignment

After collecting and reviewing the documents accompanying the consignment, determine if the consignment fits in a category that requires special attention, such as the following:

- Entering under the National Cut Flower Release Program (NCRP)
- A precleared consignment
- Articles from countries infested with light brown apple moth (LBAM)
- Articles from countries infested with Asian longhorned beetle (ALB) or citrus longhorned beetle (CLB)

Because you may need to follow special procedures for processing consignments, use Table 2-2 below to determine the category of the consignment and what to do or where to go next.

Table 2-2 Categories of Consignments

If the articles are:	Then:
Entering under the NCRP	GO to Protocol for The National Cut Flower Release Program on page 2-23
Precleared by PPQ at a foreign site	GO to Precleared Flowers and Greenery on page 2-25
From countries infested with LBAM[1]	GO to Articles from Countries Infested with Light Brown Apple Moth (LBAM) on page 2-27
From countries infested with ALB or CLB[2]	GO to Articles from Countries Where Asian Longhorned Beetle and/or Citrus Longhorned Beetle Populations Are Present on page 2-28

1 Australia, Ireland, New Caledonia, New Zealand, and the United Kingdom.

2 Afghanistan, China, Croatia, European Union, Indonesia, Japan, Republic of Korea, Democratic People's Republic of Korea, Madagascar, Malaysia, Myanmar, Philippines, Taiwan, and Vietnam.

Step 2: Determine Articles' Regulatory Status

After collecting and reviewing the documents accompanying the shipment, determine the admissibility of each kind of cut article using the decision tables that follow and the *Reference* chapter if directed. If a PPQ Form 203 is present, the articles may be precleared by APHIS at origin.[4] For additional information on preclearance, see Precleared Flowers and Greenery on page 2-25.

Most entries in the *Reference Tables* are by genus. Infrequently, higher taxa are used (Bambusacea, Coniferae, Loranthaceae, Poaceae, Proteaceae, and Rutaceae). To find the common names and groups of plants listed by taxa higher than genus (**except** Poaceae), use the *Index*.

4 Currently **only** Chile and Jamaica have preclearance programs for cut flowers and greenery.

The more common cut article imports usually:

- Will **not** be from protected plants
- Will **not** be listed in the *Reference* chapter as restricted or prohibited
- Will **not** require a permit

If you are at a port that participates in the National Cut Flower Release Program (NCFRP), refer to the Protocol for The National Cut Flower Release Program on page 2-23.

Table 2-3 Screening for Restrictions Concerning CITES, ESA, Federal Noxious Weeds, or Parasitic Plants

If the article is:	Then:
Listed in the Identification of Protected Plants, Noxious Weeds, or Parasitic Plants on page 2-29	GO to Table 2-4 on page 2-9
Not listed in the Identification of Protected Plants, Noxious Weeds, or Parasitic Plants on page 2-29	GO to Table 2-5 on page 2-10

Table 2-4 Cut Articles Protected by CITES or ESA, or are FNW or Parasitic Plants

If the listed articles are:	And the articles are:	Then:
Listed in the *Reference Tables*	→	FOLLOW the directions in the *Reference Tables*
Not listed in the *Reference Tables*	CITES- or ESA-protected plants	1. HOLD shipment 2. If you are a designated CITES port[1] for the cut articles being imported: A. TAKE regulatory action under plant quarantines and plant pest regulations B. REGULATE as CITES or ESA as appropriate 3. If you are **not** a designated CITES port[1] for the cut articles being imported: A. SAFEGUARD under plant quarantines and plant pest regulations B. GIVE the importer one of the following options: a. REEXPORT the cut articles to the country of origin b. REROUTE the cut articles to a designated CITES port[1] ***NOTE***: Shipping and handling charges are the importer's responsibility
	Federal noxious weeds	1. HOLD shipment 2. CONTACT a PPQ botanist at the nearest Plant Inspection Station
	Parasitic plants	PROHIBIT ENTRY
	Not from protected plants, noxious weeds, or parasitic plants	GO to Table 2-5 on page 2-10

1 For a list of designated CITES ports, see Chapter 5, Designated CITES Ports in the CITES I-II-III Timber Species Manual.

Table 2-5 Cut Articles NOT Protected by CITES or ESA, or NOT Listed as a FNW, or Parasitic Plant

If the articles are:	And the articles were grown in:	And the articles are:	Then:
Listed in the *Reference Tables*	→	→	1. Follow the directions in the *Reference Tables* 2. GO to Table 2-6 on page 2-10
Not listed in the *Reference Tables*	Afghanistan, Canada (areas where ALB is present), China, Croatia, European Union, Indonesia, Japan, Republic of Korea, Democratic People's Republic of Korea, Madagascar, Malaysia, Myanmar, Philippines, Taiwan, or Vietnam	Regulated for ALB/CLB (see Host Genera on page 2-28)	GO to Table 2-19 on page 2-29
		Not regulated for ALB/CLB	GO to Table 2-6 on page 2-10
	A country **other than** those listed above	→	

Table 2-6 Cut Articles, Additional Considerations

If the articles:	And are:	And:	And for:	Then:	Authority:
Have fruit attached	Listed in the *Reference Tables*	**No** special instructions for handling the fruit are listed	Commercial use	GO to *Step 3*	7 CFR 319.56
			Personal use	GO to *Step 4*	
		Special instructions are listed	Commercial use	1. FOLLOW the instructions in the table 2. GO to *Step 3* if necessary	
			Personal use	1. FOLLOW the instructions in the table 2. GO to *Step 4* if necessary	
	Not listed in the *Reference Tables*	→	→	USE FAVIR to regulate	
Do not have fruit attached	→	→	Commercial use	GO to *Step 3*	7 CFR 319.74
	→	→	Personal use	GO to *Step 4*	

Step 3: Determine Whether to Inspect or Authorize Movement

Use Table 2-7 below to determine if you will authorize movement to another port staffed by CBP and equipped to complete the inspection.

Table 2-7 Residue Cargo Handling

If the cut flowers are:	And the other port is:	And the cut flowers are with:	Then:
Remaining on board a carrier destined to another port	Equipped to complete the inspection	Stems, leaves, or inflorescences **only—never** with fruits	1. STAMP the air waybill or bill of lading as "SHIPMENT AUTHORIZED TO:" 2. RELEASE the inbound manifest
		Botanical fruits	1. REQUIRE a transit permit under 7 CFR 352 2. REFER to the *Manual for Agricultural Clearance (MAC)* for transit procedures.
	Not equipped to complete the inspection	→	1. INSPECT the shipment at the port of first arrival 2. CONTINUE to *Step 4*
Removed at the first port of arrival	→	→	

Step 4: Check for Import Requirements

Certain countries may have requirements for all articles of cut flowers and greenery, whether cut/harvested in the country or moving into or through countries of concern. Use Table 2-8 on page 2-12 to determine entry requirements for all cut flowers and greenery from specific countries.

NOTICE

If the Reference Tables on page 3-3 note that a specific foreign phytosanitary certificate, treatment, or some other APHIS-PPQ requirement is needed for specific articles, enforce accordingly.

Table 2-8 Requirements for Cut Flowers and Greenery from Specific Countries

If the article was cut in:	And the article transited[1]:	And the shipment is:	Then:
◆ Australia ◆ New Caledonia ◆ New Zealand ◆ Republic of Ireland ◆ United Kingdom[2]	→	Accompanied by a phytosanitary certificate with additional declaration (AD) attesting to freedom from light brown apple moth[3]	PROCEED to *Step 5: Identify the Level of Pest Risk*
		Lacking a phytosanitary certificate with AD as above	REFUSE ENTRY
Netherlands	→		GO to Table 2-9 on page 2-13
A country **other than** those listed above	◆ Australia ◆ New Caledonia ◆ New Zealand ◆ Republic of Ireland ◆ United Kingdom	Accompanied by a phytosanitary certificate with additional declaration (AD) attesting to freedom from light brown apple moth	
		Lacking a phytosanitary certificate with AD as above	REFUSE ENTRY
	Netherlands[4]	→	GO to Table 2-9 on page 2-13
	None of the above countries	→	PROCEED to *Step 5: Identify the Level of Pest Risk*

1 Does **not** include FROB cargo that never discharges the original carrier, nor offloaded articles that remain within the airport for transfer to another carrier.

2 United Kingdom includes England, Orkney Islands, Scotland and Wales, Channel Islands, Northern Ireland, and Isle of Man and Shetland Islands.

3 See Articles from Countries Infested with Light Brown Apple Moth (LBAM) on page 2-27 for approved wording of the AD.

4 Verify Netherlands country of origin by inspecting the phytosanitary certificate.

Table 2-9 Articles Moving Directly from or Moving Through[1] the Netherlands

If the article is:	And the shipment:	And the shipment is:	Then:
◆ *Amaryllis* spp. (belladonna lily or naked lady) ◆ *Anthurium* spp. (tailflower, flamingo flower, or boy flower) ◆ *Cymbidium* spp. (boat orchid) ◆ *Freesia* spp. ◆ *Hippeastrum* spp. ◆ *Hyacinthus* spp. (hyacinth) ◆ *Lilium* spp. (lily) ◆ *Narcissus* spp. (daffodil) ◆ *Phalaenopsis* spp. (moth orchid) ◆ *Rosa* spp. (rose) ◆ *Tulipa* spp. (tulip) ◆ *Zantedeschia* spp. (arum lily or calla lily)	Originates from: ◆ Australia ◆ New Caledonia ◆ New Zealand ◆ Republic of Ireland ◆ United Kingdom[2]	Lacking a phytosanitary certificate with AD as described below	REFUSE ENTRY
		Accompanied by a phytosanitary certificate with additional declaration (AD) attesting to freedom from light brown apple moth[3]	PROCEED to *Step 5: Identify the Level of Pest Risk*
	A country **other than** those listed above	→	
Any cut flowers or greenery **other than** those listed above	→	Accompanied by a phytosanitary certificate	
		Lacking a phytosanitary certificate	REFUSE ENTRY

1 Does **not** include FROB cargo that never discharges the original carrier, nor offloaded articles that remain within the airport for transfer to another carrier.

2 United Kingdom includes England, Orkney Islands, Scotland and Wales, Channel Islands, Northern Ireland, and Isle of Man and Shetland Islands.

3 See Articles from Countries Infested with Light Brown Apple Moth (LBAM) on page 2-27 for approved wording of the AD.

Step 5: Identify the Level of Pest Risk

There are three levels of pest risk: **high**, **moderate**, and **low**. The level of pest risk in the following table is based on previous imports and interceptions. Cut flowers that are **high** risk or **low** risk are listed in Table 2-10 on page 2-14. Cut flowers **not** listed in the table are moderate risk.

NOTICE

All cut flowers, garlands, greenery, and wreaths from Australia, Ireland, New Caledonia, New Zealand, and the United Kingdom are **high** risk (see Special Procedures on page 2-23).

NOTICE

If you feel the level of pest risk in the guide is either excessive or too lenient for a particular kind of flower from a specific country or region of the world, notify USDA–APHIS–PPQ through proper channels. PPQ periodically reevaluates the levels of pest risk and makes appropriate changes based on new interceptions, field input, or other pest information.

Check the document as well as box markings to verify country of origin. Make a note on invoices or paperwork of the risk level found in Table 2-11 on page 2-19.

Table 2-10 Guide to the Pest Risk Level of Cut Flowers (page 1 of 4)

If the cut flowers are:	And the country or region where the flowers were grown is:	Then identify the pest risk level as:
Alstroemeria (Peruvian lily)	Africa	High
	Asia	High
	Australia[1]	High
	Ecuador	Low
	Europe	High
Amaryllis (belladonna)	Netherlands	Low
	South Africa	Low
Anemone (windflower)	Israel	Low
	Netherlands	High
Anthurium (tailflower)	Colombia	Low
	Costa Rica	Low
	Jamaica	Low
	Netherlands	Low
Antirrhinum (snapdragon)	Argentina[2]	High
	Colombia	Low
Aster (aster)	Colombia	High
	Costa Rica	Low
	Dominican Republic	Low
Berzelia	Netherlands	High
	South Africa	High
Brodiaea (= *Triteleia*, = *Ipheion*) (spring starflower)	Netherlands	Low
Brunia	Netherlands	High
	South Africa	High
Chamaelaucium (waxflower)	Israel	High
Chrysanthemum (mum)[3]	Africa	High
	Argentina[2]	High
	Colombia	High
	Chile	High
	Dominican Republic	Low
	Ecuador	High
	Europe	High
Crocosmia (autumn gold, garden montbretia)	All countries	High
Cymbidium	Netherlands	Low
Cytisus (scotch broom)	Italy	High

Table 2-10 Guide to the Pest Risk Level of Cut Flowers (page 2 of 4)

If the cut flowers are:	And the country or region where the flowers were grown is:	Then identify the pest risk level as:
Delphinium (=*Consolida*) (larkspur)	Netherlands	High
Dianthus (carnation, pinks)	Chile	Low
	Costa Rica	Low
	Dominican Republic	Low
	Guatemala	Low
	Panama	Low
	Peru	Low
Eryngium (button snake-root, sea holly, spirit weed)	Netherlands	High
Euphorbia (spurge, poinsettia)	Netherlands	Low
Eustoma grandiflora (Lisianthus)	Colombia	Low
	Ecuador	Low
Forsythia (golden-bells)	Netherlands	Low
Freesia	Colombia	Low
	Netherlands	Low
Geranium (cranesbill)	Argentina[2]	High
Gerbera (Transvaal daisy, Barberton daisy)	Costa Rica	Low
	Ecuador	Low
Gladiolus (sword lily)	All countries	High
Gloriosa (glory lily)	Netherlands	Low
Gypsophila (baby's breath)	Africa	High
	Asia	High
	Australia[1]	High
	Europe	High
Hippeastrum	Netherlands	Low
	South Africa	Low
Hyacinthus (hyacinth)	Netherlands	Low
Hypericum (St. John's wort)	All countries	High
Ixia (African corn lily)	Netherlands	Low
Leucadendron	Netherlands	High
	South Africa	High
Leucospermum	Netherlands	High
	South Africa	High
Liatris (blazing star, button snake-root, gay-feather)	Dominican Republic	Low
	Ecuador	Low
	Netherlands	High

Table 2-10 Guide to the Pest Risk Level of Cut Flowers (page 3 of 4)

If the cut flowers are:	And the country or region where the flowers were grown is:	Then identify the pest risk level as:
Lilium (lily)	Colombia	Low
	Costa Rica	Low
	Dominican Republic	Low
	Ecuador	Low
	Netherlands	Low
	New Zealand[1]	High
	South Africa	Low
Limonium (sea lavender, statice)	Ecuador	Low
Montbretia (= *Tritonia*)	Netherlands	Low
Muscari (grape-hyacinth)	Netherlands	Low
Narcissus (daffodil)	United Kingdom	High
	Israel	Low
	Netherlands	Low
Nerine (Guernsey lily)	Netherlands	Low
Orchid	Australia[1]	High
	Netherlands	Low
	New Zealand[1]	High
	Singapore	High
	Thailand	High
Ornithogalum (chincherinchee, star-of-Bethlehem)	Colombia	Low
	Netherlands	High
Phalaenopsis spp.	Netherlands	Low
Physostegia (false dragonhead, obedient plant)	Netherlands	High
Ranunculus (Persian buttercup)	Israel	Low
	Netherlands	High
Rosa (rose)[4]	Bolivia	Low
	Chile	Low
	Colombia	Low
	Costa Rica	Low
	Dominican Republic	Low
	Ecuador	Low
	Netherlands	Low
	Panama	Low
	Peru	Low
Rose bouquets[5]	Colombia	Low
	Costa Rica	Low
	Ecuador	Low
	Guatemala	Low

Table 2-10 Guide to the Pest Risk Level of Cut Flowers (page 4 of 4)

If the cut flowers are:	And the country or region where the flowers were grown is:	Then identify the pest risk level as:
Rudbeckia (coneflower, black-eyed Susan)	Netherlands	High
Ruscus (butcher's broom, box holly)	Israel	Low
	Colombia	Low
	Ecuador	Low
	Italy	High
	Netherlands	Low
Scabiosa (scabious, pincushion flower)	Netherlands	High
Spiraea (spirea, bridal-wreath)	Netherlands	High
Strelitzia (bird of paradise)	Costa Rica	Low
	Guatemala	Low
Triteleia (=*Brodiaea*)	Netherlands	Low
Tritonia (=*Montbretia*) (blazing star)	All countries	High
Tulipa (tulip)	Netherlands	Low
Veronica	Netherlands	High
Watsonia	All countries	High
Zantedeschia (arum lily, calla lily)	Colombia	Low
	Costa Rica	Low
	Ecuador	Low
	Netherlands	Low
	New Zealand[1]	High

1 See the phytosanitary certificate additional declaration requirements listed in Table 2-8 on page 2-12.

2 Inspect for mites (*Brevipalpus chilensis*) on the following cut flowers from Argentina: Antirrhinum (snapdragon) on page 2-14, Chrysanthemum (mum) on page 2-14, and Geranium (cranesbill) on page 2-15.

3 Carefully inspect for chrysanthemum white rust. Look on the upper and lower surface of leaves and flower bracts for whitish or yellowish- to light-green (water-soaked) lesions (early symptoms). Also look on the underside of leaves, flower bracts, and along the stem for whitish- to caramel-colored raised, velvety pustules (infectious spores).

4 If inspecting *Rosa* spp. in Puerto Rico, assign a moderate risk level. If you find *Phragmidium*, HOLD the shipment and CONTACT a PPQ officer through proper channels.

5 If 75% of the stems in a bouquet are roses (excluding greenery), identify the bouquet as a rose bouquet.

CONTINUE to *Step 6* to determine the inspectional unit and sample size.

Step 6: Determine the Sample Size

To determine the sample size, complete the following:

1. Use Table 2-11 on page 2-19 and Table 2-12 on page 2-19 to determine what constitutes an inspectional unit.
2. Use Table 2-13 on page 2-20 to determine the sample size. A sample size is how many boxes you should open and how many flowers you should examine from each inspectional unit. This table is **only** a guide. If any of the following situations present themselves, increase the number of boxes to open or the amount of flowers to examine:
   A. Shipment has been transshipped (pest risk increases because of the possibility of infestation at the transshipment point)
   B. Symptoms or signs of pests are found in the sample
   C. Time of year alerts you to seasonal pests
   D. Recent pest findings indicate a higher level of pest risk than listed in the guide to the level of pest risk (see Table 2-10 on page 2-14)

Table 2-11 Determine the Inspectional Unit

If there:	And are imported by:	And the cut articles are:	And the boxes contain:	Then:
Is one bill of lading	→	→	Same genus[2]	1. CONSIDER all the boxes as one inspectional unit 2. CONTINUE to Table 2-13 on page 2-20
			Different genera	CONTINUE to Table 2-12 on page 2-19
Are two or more bills of lading[1]	One consignee	Certain to have been grown at the same identifiable location	Same genus	1. CONSIDER all the boxes as one inspectional unit 2. CONTINUE to Table 2-13 on page 2-20
			Different genera	CONTINUE to Table 2-12 on page 2-19
		Uncertain to have been grown at the same location (the grower **cannot** be identified)	Different genera	
			Same genus[2]	1. CONSIDER those boxes on the one bill of lading as one inspectional unit 2. CONTINUE to Table 2-13 on page 2-20
	More than one consignee	Uncertain to have been grown at the same location (the grower **cannot** be identified)	Same genus[2]	1. CONSIDER all the boxes on one bill of lading as one inspectional unit 2. CONTINUE to Table 2-13 on page 2-20
			Different genera	CONTINUE to Table 2-12 on page 2-19
		Certain to have been grown at the same identifiable location	Different genera	
			Same genus	1. If operationally feasible, CONSIDER all boxes as one unit. If **not**, CONSIDER the boxes on one bill of lading as one inspectional unit 2. CONTINUE to Table 2-13 on page 2-20

1 Includes a bill of lading for one consignee and a house air waybill for one consignee; **does not** include a consolidated air waybill.

2 Flowers of the same genus that appear to be grown at different locations or under different conditions may be considered as a separate inspectional unit

Table 2-12 Determine the Inspectional Unit For Shipments That Have Different Genera

If the boxes contain:	And each box contains:	Then:
One genus per box	→	CONSIDER all boxes containing the same genus as one inspectional unit (one inspectional unit for each genus)
Mixed flowers (more than one genus per box)	Same mixture	CONSIDER all boxes one inspectional unit
	Different mixtures	CONSIDER all boxes containing common contents (genera) grouped into one inspectional unit

Table 2-13 Determine the Sample Size of Each Inspectional Unit

If the boxes contain:	And the pest risk level is:	And the number of boxes is:	Then:
One genus per box	High	→	1. OPEN and EXAMINE at least two boxes of each genus 2. INSPECT 100% of the contents 3. CONTINUE to *Step 7*
	Moderate	→	1. OPEN and EXAMINE at least one box of each genus 2. INSPECT 100% of the contents 3. CONTINUE to *Step 7*
	Low	**Less than** 50	1. OPEN and EXAMINE at least one box of each genus 2. INSPECT between 25 and 50% of the contents 3. CONTINUE to *Step 7*
		50 **or greater**	1. OPEN and EXAMINE at least one box of each genus 2. INSPECT 100% of the contents 3. CONTINUE to *Step 7*
Two or more genera per box	→	→	1. OPEN and EXAMINE enough boxes to inspect two bunches of each genus, placing emphasis on those flowers of high risk and moderate risk 2. CONTINUE to *Step 7*

Step 7: Inspect the Cut Flowers and Foliage

Follow these procedures to inspect cut flowers and foliage:

1. Put on disposable gloves (plastic or rubber) before handling the flowers or foliage to protect yourself against articles that may have been treated with a pesticide.

SAFETY

As a precaution, inspectors should always wear disposable gloves when handling plant materials and handle all imported plant materials as if they were contaminated with pesticide. Inspectors should discard their gloves and thoroughly wash their hands after inspecting plant material prior to consuming food or beverages.

2. Tell the importer or importer's representative which boxes or containers they need to pull out of the shipment and open for inspection.
3. Prepare the stems or bunches of flowers and foliage for inspection. The techniques used differ for articles packed in bunches than for those packed as loose stems. Usually loose stems are of a lower risk than those tied in bunches (see Table 2-14 on page 2-22).
4. Examine the flowers and foliage by selectively:
   A. Spreading apart inflorescences (petals of the flowers)
   B. Opening the calyx at the base of the flower

C. Breaking apart bracteal heads (leaf-like plant part at the base of the flowers)

D. Cutting open stems

5. Look for the following:

   A. Freedom from roots and soil—if roots are attached to fresh, cut articles as sometimes occurs with lily-of-the-valley, REGULATE them as if they were intended for planting or growing. When it is practical, give the importer the option of cutting off the roots and entering the cut articles under 7 CFR 319.74. Otherwise, HOLD the shipment and CONTACT a PPQ officer through proper channels.

   B. Presence of fruits—if fruits are present, follow Table 2-15 on page 2-22.

   C. Packing material—have unauthorized material removed and destroyed.

   D. Pests and diseases—when found, use Table 2-16 on page 2-23 to determine the appropriate quarantine action. For a list of actionable rusts, refer to the ARS Fungal Diagnostic Fact Sheets.

NOTICE

Carefully but thoroughly inspect delicately packed flowers.

   a. Shake or tap each flower or bunch while holding over the inspection surface. Tap with enough force to dislodge any crawling insect larvae, adult flying insects that cling to the article, or fecal material.

   b. Closely examine the inspection surface to catch the smaller pests such as thrips, aphids, and early instar larvae. Look for anything that moves and fecal material that may have been dislodged.

6. Examine the leaves and stems for the following:

   A. Signs of feeding (discolored tunneling in the leaves made by insects that feed internally)

   B. Symptoms of diseases (discolored sections, rust, or black spots)

   C. Snails, larvae, and/or insects

7. Inspect the bottom of the box for larvae, insects, snails, or evidence of these pests.

8. Once you complete the inspection, appropriately discard the gloves. Wash your hands with soap and water.

9. If the shipment shows evidence of having been treated but was not so marked, mark the documents and container to alert others who may handle the shipment.

10. CONTINUE to *Step 8*.

Table 2-14 Preparing Cut Flowers for Inspection

If the cut articles are packed as:	Then:
Bunches	1. REMOVE the bunches one at a time from the box 2. If the bunches are individually wrapped: A. TAKE off an end or side of the wrapping B. REMOVE the wrapping over the inspection surface 3. CUT strings or bands to free the leaves and flowers
Loose stems	1. If the articles have a high-level pest risk, REMOVE all the stems from the box 2. If the articles have a low- or moderate-level pest risk: A. REMOVE only the first layer of articles from the box B. INSPECT the remaining flowers in the box

Table 2-15 Action to Take When Inspecting Cut Flowers for Presence of Fruits

If fruits are:	And the genus:	Then:
Present	Is listed in the *Reference Tables* on page 3-3 as **admissible** with fruits **EXAMPLE** See Ilex spp. (holly, inkberry, winterberry), Aquifoliaceae on page 3-34 from Canada.	CONTINUE with your inspection
	Is listed in the *Reference Tables* on page 3-3 as **inadmissible** with fruits	PROHIBIT ENTRY (such fruits may be hosts to fruit flies)
	Is **not** listed in the *Reference Tables* OR **not** listed in the *Reference Tables* as admissible with fruits	Refer to *FAVIR* for fruit requirements
Absent	→	CONTINUE with your inspection

Step 8: Take Regulatory Actions Based on Inspection Results

Take the following steps to determine the action to take based on pest findings:

1. If you find pests (insects, mollusks, pathogens), HOLD the shipment and SEND the interception to the nearest PPQ Plant Inspection Station through the proper channels for identification. If you find contaminants (inadmissible plant parts, plant debris, soil), HOLD the shipment and REQUIRE removal and disposal of contaminant or PROHIBIT ENTRY.
2. CONSULT with PPQ to decide the regulatory action to take based on pest findings and whether the pests can be destroyed by an effective and authorized treatment.
3. COMPLETE an Emergency Action Notification (EAN) (PPQ Form 523) and provide the importer or broker with the following options:
   A. Treat the inspectional unit under PPQ monitoring
   B. Destroy the inspectional unit under CBP supervision at the owner's expense
   C. Reexport the inspectional unit under proper safeguarding measures

4. When you find quarantine-significant pests, use Table 2-16 on page 2-23 to determine the inspectional unit requiring quarantine action.

Table 2-16 Quarantine Action to Take Based on Pest Findings

If pests are found in an inspectional unit containing:	And the pests found are:	Then:
Same genus in all the boxes	→	TAKE quarantine action on the whole inspectional unit
Mixed varieties and genera with more than one genus per box	On or closely associated with one genus of cut articles (scale, insects, leafminers, or pathogens)	TAKE quarantine action on all the boxes containing the same genus that are found infested or infected
	Not on or closely associated with one genus of cut articles (mobile pests such as lepidopteras, thrips, and snails)	TAKE quarantine action on the whole inspectional unit

5. RECORD the inspection in AQAS database(s).

Special Procedures

Protocol for The National Cut Flower Release Program

Use these special procedures for clearing commercial shipments of cut flowers imported under the protocol of the National Cut Flower Release Program (NCFRP).

Purpose

The purpose of the NCFRP is to use pest risk analysis in processing agricultural cargo more effectively and efficiently by expediting the release of high-volume, low-risk cut flowers.

Participating Ports

The following POEs are participating in the NCFRP:

- George Bush Intercontinental Airport; Houston, Texas
- Hartsfield-Jackson Atlanta International Airport; Atlanta, Georgia
- John F. Kennedy International Airport; Jamaica, New York
- Los Angeles International Airport; Los Angeles, California
- Miami International Airport; Miami, Florida
- San Juan Luis Munoz Marin International Airport; San Juan, Puerto Rico

Flower/Country Combinations Eligible for Release

Table 2-17 below identifies the combinations of flower type and country of origin that are eligible for release.

Table 2-17 List of Flower and Country of Origin Combinations Eligible for Release

Flower Type	Country of Origin
Dianthus spp. (mini)	Ecuador
Liatris spp. (blazing star) Asteraceae	Dominican Republic, Ecuador
Lilium spp. (lily) Liliaceae	Colombia, Costa Rica, Ecuador
Rosa spp. (rose) Rosaceae	Colombia, Costa Rica, Ecuador,
Rose bouquets[1]	Colombia, Ecuador
Zantedeschia spp. (calla lily) Araceae	Colombia, Ecuador

1 Any bouquet with 75% of the stems in the bouquet **excluding** greenery, are *Rosa* spp.

Limitations

Only commercial shipments of the cut flowers from the countries of origin listed in Table 2-17 are eligible for release under the protocol of the NCFRP.

Procedures

Regulatory officials working at the participating POEs will follow these procedures when clearing commercial shipments of the cut flowers from the countries of origin that are listed in Table 2-17 as eligible for release.

1. Use Table 2-18 below to determine eligibility for cut flower release. All commercial importations of the cut flowers from the countries of origin are inspected on randomly selected days each month.

Table 2-18 Determining Eligibility for Cut Flower Release

If the flower/country combination:	Then:
Is selected as the flower of the day	INSPECT the entire contents of one box of each flower/country combination from each grower
Is **not** selected as the flower of the day	1. RELEASE without inspection 2. CONTINUE to Documentation on page 2-25

2. USDA–APHIS–PPQ Headquarters will provide an annual schedule to CBP Agriculture Specialists (CBP AS) detailing which, if any, flower/country combinations will be inspected each day.
3. Local operations desk will advise the warehouse, airline, or importer which low-risk flower type (flower of the day), if any, will be inspected on that particular day.
4. If all flowers appearing on the air waybill or bill of lading can be released without inspection, the importer may do one of the following:

   A. Present all required paperwork at the operations desk for release; or

B. Present the required paperwork to the CBP AS at the warehouse or airline for release.

5. The local port is responsible for keeping USDA–APHIS–PPQ Headquarters advised of significant findings associated with flowers on the NCFRP. CBP is responsible for notifying USDA–APHIS–PPQ Headquarters of smuggling of flowers or other prohibited agricultural commodities associated with flowers on the NCFRP. USDA–APHIS–PPQ identifiers are responsible for notifying USDA–APHIS–PPQ Headquarters of any significant pest findings associated with flowers on the NCFRP.

Documentation

If a flower/country combination eligible for release is **not** selected as the flower of the day, stamp the paperwork "RELEASED UNDER THE CUT FLOWER RELEASE PROGRAM." Record the number of stems and/or boxes of all cut flower types imported under the NCFRP **must** be entered in the PPQ Form 280 database using appropriate codes for the Cargo Release Program. These codes will be either IRAR or REAR. Consult the *280 User Guide* for definitions of these codes.

Adding or Deleting Flowers Eligible for Release and Program Review

The risks associated with importing cut flowers are subject to change for a variety of reasons such as:

- Number and species of pests intercepted and population levels in growing areas are subject to change
- Volume of flowers fluctuates annually

For these reasons, the NCFRP will be reviewed annually. The NCFRP will also be subject to further evaluation as problems (i.e., significant pest findings or incidents of smuggling, etc.) occur.

Precleared Flowers and Greenery

Information about certain cut flowers that have been approved for preclearance from Chile and Jamaica, external databases identifying protected plants and genera of taxa regulated higher than genus, and decision tables providing the regulatory action to take on importations of fresh, cut articles is listed below.

Cut flowers and greenery have been approved for preclearance in Chile. Such shipments will be accompanied by a PPQ Form 203 endorsed by APHIS inspectors there.

NOTICE
Not all shipments will be precleared.

Chile

All cut flowers and greenery admissible into the United States are approved for preclearance from Chile. Such shipments will be accompanied by a PPQ Form 203 endorsed by APHIS inspectors there.

NOTICE

Even admissible shipments with fruits attached may be precleared from Chile. Chile exports include many fruits and vegetables.

Jamaica

The flowers and greenery approved for USDA preclearance in Jamaica are as follows:

- *Alpinia purpurata* (red ginger) Zingiberaceae
- *Anthurium* spp. (anthurium) Araceae
- *Codiaeum variegatum* (croton leaves) Euphorbiaceae
- *Cordyline terminalis* (ti leaves) Liliaceae
- *Cyperus* spp. (papyrus) Cyperaceae
- *Dracaena* spp. (dracaena) Liliaceae
- *Gerbera* spp. (gerbera) Asteraceae
- *Gladiolus* spp. (gladiolus) Iridaceae
- *Heliconia* spp. (heliconia) Heliconiaceae
- Orchidaceae family (orchid)
- *Pandanus* spp. (pandanus) Pandanaceae
- *Phaeomeria* (=*Nicolaia*) *speciosa* (torch ginger) Zingiberaceae
- *Rosa* spp. (rose) Rosaceae
- *Rumohra adiantiformis* (leather leaf fern) Dryopteridaceae
- *Strelitzia reginae* (bird of paradise) Strelitziaceae

Articles from Countries Infested with Light Brown Apple Moth (LBAM)

Special procedures on articles from countries infested with LBAM (*Epiphyas postvittana*) are listed below:

- **All** cut flowers, garlands, wreaths, and greenery arriving from Australia, Ireland, New Caledonia, New Zealand, and the United Kingdom **must** be accompanied by a phytosanitary certificate with the additional declaration "The cut flowers/garlands/wreaths/greenery in this shipment have been inspected and found free of all life stages of *Epiphyas postvittana*." PROHIBIT ENTRY to consignments **lacking** this certification. Your authority to prohibit entry is emergency measures effective August 4, 2008.
- Phytosanitary certificates for cut flowers, garlands, wreaths, and greenery arriving from New Zealand **must** have **one** of the following additional declarations (AD):
  - "The flowers were grown in greenhouses or screenhouses inspected and found free of light brown apple moth (*Epiphyas postvittana*) and the consignment was inspected and found free of LBAM." **or**
  - "The cut flowers/greenery in this shipment were produced under the MAF BNZ Exports Phytosanitary Compliance Program for light brown apple moth for the export of cut flowers and foliage to the United States."

Articles from Countries Where Asian Longhorned Beetle and/or Citrus Longhorned Beetle Populations Are Present

Anoplophora glabripennis, Asian longhorned beetle (ALB) and *Anoplophora chinensis*, citrus longhorned beetle (CLB) are both destructive wood-boring pests. Special procedures on articles from infested countries are listed in Table 2-19 on page 2-29.

Countries Where ALB and/or CLB Populations Are Present

ALB and/or CLB are present in the following countries: Afghanistan, China, Croatia, European Union[5], Indonesia, Japan, Republic of Korea, Democratic People's Republic of Korea, Madagascar, Malaysia, Myanmar, Philippines, Switzerland, Taiwan, and Vietnam.

Refer to Table 2-19 on page 2-29 for decorative branches of ALB/CLB host plants.

Host Genera

The following genera are regulated for ALB or CLB: *Acacia** spp., *Acer** spp., *Aesculus** spp., *Albizia* spp., *Alnus** spp., *Aralia* spp., *Atalantia** spp., *Betula* spp., *Broussonetia* spp., *Cajanus* spp., *Camellia* spp., *Carpinus* spp., *Carya* spp., *Castanea** spp., *Castanopsis* spp., *Casuarina* spp. (= *Allocasuarina* spp.), *Catalpa* spp., *Celtis* spp., *Cercidiphyllum* spp., *Cercis* spp., *Chaenomeles** spp., *Citrus** spp., *Cornus* spp., *Corylus* spp., *Cotoneaster** spp., *Crataegus* spp., *Cryptomeria* spp., *Cunninghamia* spp., *Cydonia* spp., (=*Pseudocydonia* spp.), *Elaeagnus* spp., *Eriobotrya* spp., *Fagus* spp., *Ficus* spp., *Fortunella** spp., *Fraxinus** spp., *Grevillea* spp. (= *Stylurus* spp.), *Hedera* spp., *Hibiscus** spp., *Ilex** spp., *Juglans* spp., *Koelreuteria* spp., *Lagerstroemia* spp., *Lindera* spp., *Liquidambar* spp., *Litchi* spp., *Maackia* spp., *Mallotus* spp., *Malus** spp., *Melia* spp., *Morus* spp., *Olea* spp., *Parrotia* spp., *Persea* spp.(= *Machilus* spp.), *Photinia* spp. (= *Stranvaesia* spp.), *Pinus* spp., *Platanus* spp., *Polygonum* spp. (= *Reynoutria* spp., = *Fallopia* spp.), *Poncirus** spp., *Populus* spp., *Prunus** spp., *Psidium* spp., *Pterocarya* spp., *Pyracantha* spp., *Pyrus** spp., *Quercus* spp., *Rhododendron* spp., *Rhus* spp., *Robinia* spp., *Rosa* spp., *Rubus* spp., *Sageretia* spp., *Salix** spp., *Sapium* spp. (=*Triadica* spp.), *Sophora* spp., *Sorbus* spp., *Styrax* spp., *Tectona* spp., *Tilia* spp., *Toona* spp., *Toxicodendron* spp., *Ulmus** spp., *Vernicia* spp. (=*Aleurites* spp.), *Viburnum** spp., *Zanthoxylum* spp., and *Ziziphus* spp.

5 Member States include Austria, Belgium, Bulgaria, Cyprus, Czech Republic, Denmark, Estonia, Finland, France, Germany, Greece, Hungary, Ireland, Italy, Latvia, Lithuania, Luxembourg, Malta, Netherlands, Poland, Portugal, Romania, Slovakia, Slovenia, Spain, Sweden, United Kingdom.

NOTICE

The ALB or CLB host genera highlighted in red* above, including any host genera within the family Rutaceae (e.g. *Atalantia* spp., *Citrus* spp., *Fortunella* spp., *Poncirus* spp.) are already more strictly regulated for other pests in the Code of Federal Regulations or other Federal Orders, **OR** have additional specific prohibitions and/or import restrictions that must also be met prior to importation. Refer to the Reference Tables on page 3-3 for the specific entry requirements.

Table 2-19 Decorative Branches or Stems from Host Plants of ALB or CLB

If grown in:	And:	And:	Then:	Authority:
Afghanistan, China, Croatia, European Union[1], Indonesia, Japan, Republic of Korea, Democratic People's Republic of Korea, Madagascar, Malaysia, Myanmar, Philippines, Switzerland, Taiwan, and Vietnam	**Greater than** 10 mm in diameter	→	PROHIBIT ENTRY	7 CFR 319.37 and Federal Order DA-2013-18 effective May 20, 2013
	10 mm **or less** in diameter	Fruit is attached	Use *FAVIR* to Regulate	7 CFR 319.56
		No fruit attached	GO to Table 2-6 on page 2-10	7 CFR 319.74
A country **free from** ALB/CLB	→			

1 Member States include Austria, Belgium, Bulgaria, Cyprus, Czech Republic, Denmark, Estonia, Finland, France, Germany, Greece, Hungary, Ireland, Italy, Latvia, Lithuania, Luxembourg, Malta, Netherlands, Poland, Portugal, Romania, Slovakia, Slovenia, Spain, Sweden, United Kingdom.

Identification of Protected Plants, Noxious Weeds, or Parasitic Plants

If you are unsure whether the cut articles are either protected by CITES or ESA, are Federal noxious weeds (FNWs), or parasitic plants; or are regulated by taxa higher than genus (i.e., family, subfamily, and tribe), access external databases in the following order:

1. *Parasitic Plants Database* (provides standardized information about the vascular plants, mosses, liverworts, hornworts, and lichens of the U.S. and its territories)
2. *CITES Species Database*
3. *Federal Noxious Weed List*
4. *Endangered Species Act (ESA) Listed Plants*

Chapter 3

Reference

Contents

Introduction 3-3
Applicability to Guam and the Commonwealth of the Northern Mariana Islands (CNMI) 3-3
Reference Tables 3-3
- Abies spp. (fir), Pinaceae 3-4
- Acacia spp., Fabaceae 3-4
- Acer spp. (maple), Aceraceae 3-5
- Actinidia spp. (kiwi), Actinidiaceae 3-5
- Aegilops spp. (goatgrass), Poaceae 3-6
- Aesculus spp. (buckeye, horse-chestnut), Hippocastanaceae 3-6
- Ajania pacifica (syn.: Chrysanthemum pacificum) (yellow splash), Asteraceae 3-7
- Alnus spp. (alder), Betulaceae 3-8
- Ananas spp. (pineapple), Bromeliaceae 3-8
- Araucariaceae 3-8
- Arecaceae (alt. Palmae) (palms) 3-9
- Bambusoideae (bamboo) 3-10
- Callicarpa spp. (mulberry, beautyberry), Lamiaceae 3-10
- Capsicum spp. (pepper), Solanaceae 3-10
- Castanea spp. (chestnut), Fagaceae 3-10
- Cedrus spp. (cedar), Pinaceae 3-11
- Chaenomeles spp. (flowering quince), Rosaceae 3-11
- Chamaedorea spp. (palm fronds), Arecaceae 3-12
- Chrysanthemum spp. (mum), Asteraceae 3-13
- Citrus spp., Rutaceae 3-13
- Coffea spp. (coffee), Rubiaceae 3-14
- Coniferae 3-14
- Cordyline spp., Asparagaceae 3-23
- Crocosmia spp. (autumn-gold, garden montbretia, montbretia), Iridaceae 3-26
- Cupressaceae 3-26
- Cycadaceae/Zamiaceae (cycads) 3-26
- Cydonia spp. (quince), Rosaceae 3-27
- Cynara spp. (artichoke), Asteraceae 3-27
- Dracaena spp., Asparagaceae 3-28
- Fortunella spp. (kumquat), Rutaceae 3-30
- Fraxinus spp. (ash), Oleaceae 3-31
- Gladiolus spp., Iridaceae 3-31

Gossypium spp. (cotton), Malvaceae 3-31
Helleborus spp. (black helleborus, Christmas-rose, green hellebore, lenten-rose, stinking hellebore), Ranunculaceae 3-32
Hibiscus spp. (giant mallow, rose mallow), Malvaceae 3-32
Hippophae spp. (sea buckthorn), Elaeagnaceae 3-33
Hypericum spp. (St. John's wort), Clusiaceae 3-33
Ilex spp. (holly, inkberry, winterberry), Aquifoliaceae 3-34
Juniperus spp. (juniper), Cupressaceae 3-35
Leucanthemella spp. (high daisy, giant daisy, max-chrysanthemum, Shasta daisy), Asteraceae 3-35
Ligustrum spp. (privet), Oleaceae 3-36
Loranthaceae (all genera of mistletoe) 3-36
Malus spp. (apple), Rosaceae 3-36
Musa spp. (banana, dwarf banana, flowering banana, plantain), Musaceae 3-37
Nepenthes spp. (pitcher plant), Nepenthaceae 3-38
Nigella spp. (fennel-flower, jack-in-the-green, love-in-a-mist, nutmeg-flower), Ranunculaceae 3-38
Nipponanthemum spp. (nippon-daisy, nipon-chrysanthemum), Asteraceae 3-39
Orchidaceae (orchids) 3-40
Oryza sativa (rice), Poaceae 3-41
Pelargonium spp. (scented geraniums), Geraniaceae 3-42
Pernettya spp. (pernettya), Ericaceae 3-42
Phoenix spp. (date palm), Arecaceae 3-43
Physalis spp. (ground cherry, Chinese-lantern plant, Japanese-lantern), Solanaceae 3-44
Picea spp. (spruce), Pinaceae 3-44
Pinaceae 3-44
Pinus spp. (pine), Pinaceae 3-44
Poaceae (grasses) 3-45
Polypodiophyta (ferns) 3-46
Poncirus spp., Rutaceae 3-46
Proteaceae (protea) 3-47
Prunus spp. (almond, apricot, cherry, cherry laurel, English laurel, nectarine, peach, plum, prune), Rosaceae 3-49
Pseudostuga spp. (Douglas fir), Pinaceae 3-49
Pyracantha spp. (firethorn), Rosaceae 3-49
Pyrus spp. (pear), Rosaceae 3-50
Ricinus communis (castor, ricin), Euphorbiaceae 3-50
Ruscus (box-holly, butcher's broom, horse-tongue, spineless butcher's-broom), Ruscaceae (also placed in Liliaceae) 3-51
Rutaceae (citrus) 3-51
Saccharum spp. (sugarcane), Poaceae 3-51
Salix spp. (osier, willow), Salicaceae 3-52

Sarracenia spp., Sarraceniaceae 3-53
Sorghum bicolor (broomcorn), Poaceae 3-54
Striga spp. (witchweed), Scrophulariaceae 3-54
Symphoricarpos (coralberry, snowberry), Caprifoliaceae 3-54
Triticum spp. (wheat and intergeneric crosses), Poaceae 3-54
Tritonia spp. (blazing star), Iridaceae 3-55
Ulmus spp. (Elm), Ulmaceae 3-55
Viburnum spp. (Guelder-rose, Japanese snowball, laurustine, snowball, summer snowflake), Adoxaceae 3-56
Watsonia spp. (bugle lily, Merians bugle lily, pink watsonia, watsonia), Iridaceae 3-60
Zamiaceae/Cycadaceae (cycads) 3-60
Zea mays (corn and closely related plants), Poaceae 3-60

Introduction

The *Reference* chapter provides tables to determine the admissibility of cut flowers and greenery.

Applicability to Guam and the Commonwealth of the Northern Mariana Islands (CNMI)

The regulatory actions listed in the Reference decision tables also apply to Guam and the Commonwealth of the Northern Mariana Islands (CNMI).

Reference Tables

When all of the available information is gathered, determine the admissibility of the fresh, cut article by finding any prohibitions or restrictions that apply in the Reference tables.

NOTICE

Regulatory officials have an option to screen for restrictions using either the *Index* to find articles listed in this chapter or to screen using the Table of *Contents* above.

The reference decision tables include:

- Action to be taken
- Authority for the action
- Prohibition or restriction to be met

Abies spp. (fir), Pinaceae

See Coniferae on page 3-14.

Acacia spp., *Fabaceae*

Acacia spp. are regulated because they are hosts of *Anoplophora chinensis*, citrus longhorned beetle (CLB) and *Anoplophora glabripennis*, Asian longhorned beetle (ALB), both destructive wood-boring pests. Use Table 3-1 to regulate fresh cut articles of *Acacia* spp.

Table 3-1 *Acacia* spp., Fabaceae

If the articles are grown in:	And the articles are:	Then:	Authority:
Afghanistan, China, Croatia, European Union[1], Indonesia, Japan, Republic of Korea, Democratic People's Republic of Korea, Madagascar, Malaysia, Myanmar, Philippines, Switzerland, Taiwan, or Vietnam	Branches or stems **greater than** 10mm in diameter	PROHIBIT ENTRY	7 CFR 319.37 and Federal Order DA-2013-18 effective May 20, 2013
	Branches or stems 10mm in diameter **or less**	INSPECT and RELEASE	
Australia and Oceania	All plant parts **except** seeds	PROHIBIT ENTRY	7 CFR 319.37
A country **other than** those listed above	All plant parts **except** seeds	INSPECT and RELEASE	

1 Member States include Austria, Belgium, Bulgaria, Cyprus, Czech Republic, Denmark, Estonia, Finland, France, Germany, Greece, Hungary, Ireland, Italy, Latvia, Lithuania, Luxembourg, Malta, Netherlands, Poland, Portugal, Romania, Slovakia, Slovenia, Spain, Sweden, United Kingdom.

Acer spp. (maple), Aceraceae

Acer spp. are regulated because they are hosts of *Anoplophora chinensis*, citrus longhorned beetle (CLB) and *Anoplophora glabripennis*, Asian longhorned beetle (ALB), both destructive wood-boring pests. Use Table 3-2 to regulate fresh cut articles of *Acer* spp.

Table 3-2 *Acer* spp. (maple), Aceraceae

If the articles are grown in:	And the articles are:	Then:	Authority:
Afghanistan, China, Croatia, Democratic People's Republic of Korea, European Union[1], Indonesia, Japan, Madagascar, Malaysia, Myanmar, Philippines, Republic of Korea, Switzerland, Taiwan, or Vietnam	Branches or stems **greater than** 10mm in diameter	PROHIBIT ENTRY	7 CFR 319.37 and Federal Order DA-2013-18 effective May 20, 2013
	Branches or stems 10mm in diameter **or less**	INSPECT and RELEASE	
Europe[2] and Japan	All plant parts **except** seeds	PROHIBIT ENTRY	7 CFR 319.37
A country **other than** those listed above	All plant parts **except** seeds	INSPECT and RELEASE	

1 Member States include Austria, Belgium, Bulgaria, Cyprus, Czech Republic, Denmark, Estonia, Finland, France, Germany, Greece, Hungary, Ireland, Italy, Latvia, Lithuania, Luxembourg, Malta, Netherlands, Poland, Portugal, Romania, Slovakia, Slovenia, Spain, Sweden, United Kingdom.

2 PROHIBIT ENTRY from Europe unless the articles meet the conditions of 7 CFR 319.37-5(m).

Actinidia spp. (kiwi), Actinidiaceae

Actinidia spp. are regulated because they are hosts of the harmful plant pest *Pseudomonas syringae* pv. *actinidiae*, causal agent of bacterial canker of kiwifruit. Therefore, PROHIBIT ENTRY of all plant parts of *Actinidia* spp. (including cut flowers and greenery but excluding fruit and seed) from all countries. The authority is 7 CFR 319.37 and Federal Order DA-2010-56, effective November 10, 2010.

Aegilops spp. (goatgrass), Poaceae

Use Table 3-3 to regulate fresh, cut articles of *Aegilops* spp. and its intergeneric crosses.

If the articles are dried, see the *Miscellaneous and Processed Products Import Manual*.

Table 3-3 *Aegilops* spp. (goatgrass) Poaceae

If grown in:	Then:	Authority:
Afghanistan, Algeria, Armenia, Australia, Azerbaijan, Bangladesh, Belarus, Bulgaria, Chile, China, Cyprus, Democratic People's Republic of Korea, Egypt, Estonia, Falkland Islands, Georgia, Greece, Guatemala, Hungary, India, Iran, Iraq, Israel, Italy, Japan, Kazakhstan, Kyrgyzstan, Latvia, Libya, Lithuania, Mexico, Moldova, Morocco, Nepal, Oman, Pakistan, Portugal, Republic of Korea, Romania, Russia, South Africa, Spain, Tajikistan, Tanzania, Tunisia, Turkmenistan, Turkey, Ukraine, Uzbekistan, or Venezuela	PROHIBIT ENTRY	7 CFR 319.59
Canada	INSPECT and RELEASE	7 CFR 330.105
Country **other than** listed above	PROHIBIT ENTRY	7 CFR 319.37

Aesculus spp. (buckeye, horse-chestnut), Hippocastanaceae

Aesculus spp. are PROHIBITED from all countries except Canada to prevent the entry of *Pseudomonas syringae* pv. *aesculi*, causal agent of bleeding canker of horse chestnut. In addition, *Aesculus* spp. are regulated because they are hosts of *Anoplophora chinensis*, citrus longhorned beetle (CLB) and *Anoplophora glabripennis*, Asian longhorned beetle (ALB), both destructive wood-boring pests. Use Table 3-4 to regulate fresh cut articles of *Aesculus* spp.

Table 3-4 *Aesculus* spp. (buckeye, horse-chestnut), Hippocastanaceae

If the articles are grown in:	And the articles are:	Then:	Authority:
All countries **except** Canada	All plant parts **except** seeds	PROHIBIT ENTRY	7 CFR 319.37, Federal Order DA-2010-02, effective January 25, 2010, and Federal Order DA-2013-18 effective May 20, 2013
Canada	→	INSPECT and RELEASE	7 CFR 319.37

Ajania pacifica (syn.: *Chrysanthemum pacificum)* (yellow splash), Asteraceae

Ajania pacifica is a monotypic genus. Use Table 3-5 to regulate fresh, cut articles of *Ajania pacifica.*

Table 3-5 *Ajania pacifica*—a monotypic genus (yellow splash) Asteraceae

If the flowers were harvested in:	And the consignment:	And:	Then:	Authority:
Andorra; Argentina; Australia; Austria; Belarus; Belgium; Bosnia and Herzegovina; Brazil; Brunei; Bulgaria; Canary Islands; Chile; China; Colombia; Croatia; Cyprus; Czech Republic; Denmark; Ecuador; Estonia; Finland; France; Germany; Greece; Hungary; Iceland; Ireland; Italy; Japan; Korea; Kosovo; Latvia; Liechtenstein; Lithuania; Luxembourg; Macedonia; Malaysia; Malta; Mexico; Moldova; Monaco; Montenegro; Netherlands; New Zealand; Norway; Peru; Poland; Portugal; Republic of South Africa; Romania; Russia; San Marino; Serbia; Slovakia; Slovenia; Spain; Sweden; Switzerland; Taiwan; Thailand; Tunisia; Ukraine; United Kingdom; Uruguay; Venezuela, and all countries, territories, and possessions of countries located in part or entirely between 90° and 180° East longitude	Is accompanied by a phytosanitary certificate or equivalent documentation[1] issued by the National Plant Protection Organization of the country of origin or its designee, that contains an additional declaration stating, "The place of production as well as the consignment have been inspected and found free of *Puccinia horiana*[2]"	Box labels and other documents accompanying consignments of cut flowers **must** be marked with the identity of the registered production site	INSPECT and RELEASE	7 CFR 330.105 7 CFR 319.74
		Identification information described above is **absent**	PROHIBIT ENTRY	
	Lacks either the certificate or the certification specified in the cell above	→		
Other than a country listed in the cells above	→	→	INSPECT and RELEASE	

1 Documentation may be written in Spanish. A legible photocopy, facsimile, or scanned copy of an original phytosanitary certificate **is** acceptable.

2 Statement **does not** need to be word for word but **must** indicate that both production site **and** the consignment have been inspected and found free of *Puccinia horiana*.

Alnus spp. (alder), Betulaceae

Alnus spp. are PROHIBITED from all countries to prevent the entry of *Phytophthora alni*, a destructive plant pathogen. Use Table 3-6 to regulate fresh cut articles of *Alnus* spp.

Table 3-6 *Alnus* spp. (alder), Betulaceae

If the articles are grown in:	And the articles are:	Then:	Authority:
All countries	All plant parts ***except*** seeds	PROHIBIT ENTRY	7 CFR 319.37

Ananas spp. (pineapple), Bromeliaceae

Fruits of *Ananas* spp. are regulated to prevent the entry of exotic fruit flies. Use Table 3-7 to regulate fresh, cut articles of *Ananas* spp.

Table 3-7 *Ananas* spp. (pineapple) Bromeliaceae

If entering:	And with:	Then:	Authority:
State or Territory **other than** Hawaii	Stems, leaves, or inflorescences **only**; **never** with fruits	INSPECT and RELEASE	7 CFR 319.74
	Botanical fruits	USE FAVIR to regulate	7 CFR 319.56
Hawaii	→	PROHIBIT ENTRY	7 CFR 319.56

Araucariaceae

See Coniferae on page 3-14

Arecaceae (alt. Palmae) (palms)

Arecaceae is a family that includes all palm genera and species. For a list of all Arecaceae genera and species, refer to GRIN Genera of Arecaceae. Use Table 3-8 to regulate palm leaves and fronds.

Table 3-8 Arecaceae (alt. Palmae) (palms)

If the palm is:	And:	And:	Then:	Authority:
Chamaedorea spp.	→	→	CONTINUE to Chamaedorea spp. (palm fronds), Arecaceae on page 3-12	
Phoenix spp.	→	→	CONTINUE to Phoenix spp. (date palm), Arecaceae on page 3-43	
CITES Appendix I or II listed includes the following genera: ◆*Beccariophoenix madagascariensis* (II) ◆*Chrysalidocarpus decipiens* (I) (now *Dypsis decipiens)* ◆*Lemurophoenix halleuxii* (II) ◆*Marojejya darianii* (II) ◆*Neodypsis decaryi* (II) (now *Dypsis decaryi*) ◆*Ravenea louvelii* (II) ◆*Ravenea rivularis* (II) ◆*Satranala decussilvae* (II) ◆*Voanioala gerardii* (II)	Is entering at a CITES designated port		1. REGULATE as CITES Appendix I or II as appropriate 2. REQUIRE both a valid: A. CITES export permit from the country of export; **and** B. Protected Plant Permit from USDA–APHIS	7 CFR 355 50 CFR 23
	Is **not** entering at a CITES designated port	Is accompanied by CITES documents	1. SAFEGUARD under plant quarantines and plant pest regulations 2. GIVE the importer **one** of the following options: A. Reexport the articles to the country of origin B. Reroute the articles to a CITES designated port ***NOTE***: Shipping and handling charges are the responsibility of the importer	
		Is **not** accompanied by CITES documents	1. HOLD shipment 2. CONTACT a CBP Agriculture Specialist (AS) at the nearest CITES designated port for instructions on initiating seizure and forfeiture actions	
Palm **other than** listed above	→	→	INSPECT[1] and RELEASE	7 CFR 330.105

1 Look for very small but visible bright-red mites (red palm mite). Also look for colonies of mites along the midrib of the leaves. Look for evidence of the mites feeding: green leaves having bright green to pale green, to yellow, and finally copper-brown streaking or spots. Look for mite webbing and cast skins.

Bambusoideae (bamboo)

Bambusoideae is a subfamily of Poaceae and its tribes Bambuseae and Brachyelytreae, which include the genera and species of bamboo. For a list of all bamboo genera and species, refer to GRIN Genera of Poaceae subfam. Bambusoideae.

Fresh, cut bamboo articles are regulated from all countries to prevent the entry of bamboo smut, *Ustilago shiraiana*, and other exotic pathogens. Therefore, PROHIBIT ENTRY to fresh, cut articles of Bambusoideae. Your authority is 7 CFR 319.37.

If the cut articles are dried, *see* the *Miscellaneous and Processed Products Import Manual*.

Callicarpa spp. (mulberry, beautyberry), Lamiaceae

INSPECT and RELEASE stems, leaves, or inflorescences, including cut flowers with fruits attached, of *Callicarpa* spp. *Callicarpa* is **not** a known host for fruit flies. For cut flowers with fruits, the authority is 7 CFR 319.56; for cut flowers free from fruits, the authority is 7 CFR 319.74.

Capsicum spp. (pepper), Solanaceae

Capsicum spp. includes bell pepper, bird pepper, chili pepper, paprika pepper, and tabasco pepper. Fruits of capsicums are regulated to prevent the entry of the Mediterranean fruit fly, *Ceratitis capitata*. Use Table 3-9 to regulate fresh, cut articles of *Capsicum* spp.

Table 3-9 *Capsicum* spp. (pepper) Solanaceae

If with:	Then:	Authority:
Stems, leaves, or inflorescences **only**; **never** with fruits	INSPECT and RELEASE	7 CFR 319.74
Botanical fruits	USE FAVIR to regulate	7 CFR 319.56

Castanea spp. (chestnut), Fagaceae

Castanea spp. are PROHIBITED from all countries to prevent the entry of *Cryphonectria parasitica*, chestnut blight and *Dryocosmus kuriphilus* Yasmatus, gall wasp. Use Table 3-10 to regulate fresh cut articles of *Castanea* spp.

Table 3-10 *Castanea* spp. (chestnut), Fagaceae

If the articles are grown in:	And the articles are:	Then:	Authority:
All countries	All plant parts **except** seeds	PROHIBIT ENTRY	7 CFR 319.37

Cedrus spp. (cedar), Pinaceae

See Coniferae on page 3-14.

Chaenomeles spp. (flowering quince), Rosaceae

Chaenomeles spp. are PROHIBITED from all countries because they are hosts to a diversity of exotic diseases and pests. Use Table 3-11 to regulate fresh cut articles of *Chaenomeles* spp.

Table 3-11 *Chaenomeles* spp. (flowering quince) Rosaceae

If the articles are grown in:	And the articles are:	Then:	Authority:
All countries	Branches with or without foliage or blooms	PROHIBIT ENTRY	7 CFR 319.37

Chamaedorea spp. (palm fronds), Arecaceae

Use Table 3-12 to regulate fresh, cut articles of *Chamaedorea* spp.

Table 3-12 *Chamaedorea* spp. (palm fronds) Arecaceae

If a pest is found that:	And the fronds are destined to:	And are consigned to an importer who:	Then:	Authority:
Requires action by USDA–APHIS–PPQ	→	→	1. COMPLETE an EAN, if fumigation is an option 2. NOTIFY local PPQ that the shipment requires treatment	7 CFR 330.105
Does not require action by USDA–APHIS– PPQ	Florida	Is **not** under a compliance agreement[1]	1. HOLD the shipment 2. CONTACT the SPHD's office through proper channels	
		Is under a compliance agreement[1]	RELEASE; notification is **not** required	
	State or region **other than** listed above	→		

1 All *Chamaedorea* spp. fronds imported for distribution in Florida **must** include a fumigation certificate of treatment. Below are importers under compliance in Florida:

Blue Ribbon Blossoms
7045 NW 46th St.
Miami, FL 33166

CA Foliage Bouquets Corp
5109 NW 4th Terrace
Miami, FL 33126

Continental Farms
1800 NW 89th Pl.
Miami, FL 33172

Costa Tropicals and Flowers
2289 NW 82nd Ave.
Miami, FL 33122

Custom Broker Outsourcing
8009 NW 36th St.
Miami, FL 33166

Esmeralda
1800 NW 89th Pl
MIami, FL 33172

Floral Sense
1444 NW 82nd Ave.
Miami, FL 33126

Florida Greens
7045 NW 46th St.
Miami, FL 33166

Flower Transfer
1480 NW 94th Ave.
Miami, FL 33172

Freshworld Logistics, Inc.
2605 NW 75th Ave.
Miami, FL 33122

Interaxion Floral Management LLC
6901 NW 41 St.
Miami, FL 33166

Island Tropical, Inc.
6903 NW 46th St.
Miami, FL 33166

J.A. Flower Service
2003 NW 70th Ave.
Miami, FL 33122

JMG Flower Services
2283 NW 82nd Ave.
Miami, FL 33122

K&M Handling LLC
2119 N.W. 79 Ave
Miami FL 33177

Natural Blossoms
7045 NW 46th St.
Miami, FL 33166

Orocosta Agroindustrial
c/o Melex Customhouse Brokers
Miami, FL

Scarlet Farms Ltd.
9391 NW 13 St.
Miami, FL 33172

Simpson's Greens and Floral Distribution
8301 NW 30th Terr.
Miami, FL 33122

Uniflora Overseas Florida
27810 Haywood Worm Farms Rd.
Okahumpka, FL 34762

Universal Greens
7110 NW 50th St.
Miami, FL 33166

U.S. Greens
3004 NW 79th Ave.
Miami, FL 33122

V&T Orchids
2200 NW 102nd Ave.
Miami, FL 33172

Chrysanthemum spp. (mum), Asteraceae

The usual mum in florists' trade is *Chrysanthemum x morifolium* (florist's chrysanthemum, mum).

Use Table 3-13 to regulate fresh, cut articles of *Chrysanthemum spp.* and List of Species Susceptible to Chrysanthemum White Rust on page B-2.

Table 3-13 *Chrysanthemum* spp. (mum) Asteraceae

If the flowers were harvested in:	And the consignment:	Then:	Authority:
Andorra; Argentina; Australia; Austria; Belarus; Belgium; Bosnia and Herzegovina; Brazil; Brunei; Bulgaria; Canary Islands; Chile; China; Colombia; Croatia; Cyprus; Czech Republic; Denmark; Ecuador; Estonia; Finland; France; Germany; Greece; Hungary; Iceland; Ireland; Italy; Japan; Korea; Kosovo; Latvia; Liechtenstein; Lithuania; Luxembourg; Macedonia; Malaysia; Malta; Mexico; Moldova; Monaco; Montenegro; Netherlands; New Zealand; Norway; Peru; Poland; Portugal; Republic of South Africa; Romania; Russia; San Marino; Serbia; Slovakia; Slovenia; Spain; Sweden; Switzerland; Taiwan; Thailand; Tunisia; Ukraine; United Kingdom; Uruguay; Venezuela, and all countries, territories, and possessions of countries located in part or entirely between 90° and 180° East longitude	Is accompanied by a phytosanitary certificate or equivalent documentation[1], issued by the National Plant Protection Organization of the country of origin or its designee, that contains an additional declaration stating, "The place of production as well as the consignment have been inspected and found free of *Puccinia horiana*[2]"	INSPECT and RELEASE	7 CFR 330.105 7 CFR 319.74
	Lacks either the certificate or the certification specified in the cell above	PROHIBIT ENTRY	
Other than a country listed in the cells above	→	INSPECT and RELEASE	

1 Documentation may be written in Spanish. A legible photocopy, facsimile, or scanned copy of an original phytosanitary certificate is acceptable.

2 Statement **does not** need to be word for word but **must** indicate that both production site and the consignment have been inspected and found free of *Puccinia horiana*.

Citrus spp., Rutaceae

See Rutaceae (citrus) on page 3-51.

Coffea spp. (coffee), Rubiaceae

Coffea spp. are regulated to prevent the entry of Mediterranean fruit fly, *Ceratitis capitata*, coffee berry borer, *Hypothenemus hampei*, and *Hemileia vastatrix*, an injurious rust disease of coffee. Use Table 3-14 to regulate fresh, cut articles of *Coffea* spp.

Table 3-14 *Coffea* spp. (coffee) Rubiaceae

If moving to:	And with:	Then:	Authority:
Hawaii or Puerto Rico	→	PROHIBIT ENTRY	7 CFR 319.73
State or Territory **other than** Hawaii or Puerto Rico	Stems, leaves, or inflorescences **only**; **never** with fruits	INSPECT and RELEASE	7 CFR 319.74
	Botanical fruits	PROHIBIT ENTRY	7 CFR 319.56

Coniferae

This heading includes all genera of conifers (cone-bearing trees and shrubs). Conifers are regulated to prevent the entry of a wide variety of insect pests (from defoliators to borers) and various pathogens (e.g., cankers and rusts).

Common examples of conifers include pine, fir, spruce, hemlock, and Douglas fir. Conifers include the following families:

- Araucariaceae (see GRIN Genera of Araucariaceae)
- Cupressaceae (see GRIN Genera of Cupressaceae)
- Pinaceae (see GRIN Genera of Pinaceae)
- Podocarpaceae (see GRIN Genera of Podocarpaceae)
- Sciadopityaceae (see GRIN Genera of Sciadopityaceae)
- Taxaceae (see GRIN Genera of Taxaceae)

Begin at Table 3-15 on page 3-15 to regulate fresh, cut articles of all conifers including cut Christmas trees of pine, spruce, fir, and Douglas fir.

Table 3-15 Cut Conifer Christmas Trees, Boughs, Wreaths, or Garlands from all Origins

If from:	And the cut articles are:	And the genus is:	And there are:	Then:	Authority:
Mexico	→			GO to Table 3-16	
Canada	→			GO to Table 3-17	
A country **other than** Mexico or Canada	Christmas trees	→		PROHIBIT ENTRY	7 CFR 319.40
	Boughs, wreaths, or garlands	*Pinus* (pine)[1]	**Two** or **three** needles in a cluster	PROHIBIT ENTRY	7 CFR 319.37
			Five needles in a cluster and the branches are 10 mm or less in diameter	INSPECT and RELEASE	7 CFR 330.105
		◆*Abies* (fir) ◆*Cathaya* ◆*Cedrus* (cedar) ◆*Juniperus* (juniper) ◆*Keteleeria* ◆*Larix* (larch) ◆*Picea* (spruce) ◆*Pseudolarix* (golden larch) ◆*Pseudotsuga* (Douglas fir) ◆*Tsuga* (hemlock)	→	PROHIBIT ENTRY	7 CFR 319.37
		Other than one listed above	→	INSPECT and RELEASE	

1 *Pinus* spp. are regulated because they are hosts of the harmful plant pests *Anoplophora chinensis*, citrus longhorned beetle (CLB) and *Anoplophora glabripennis*, Asian longhorned beetle (ALB), both destructive wood-boring pests. If the articles are from Afghanistan, China, Croatia, European Union, Indonesia, Japan, Republic of Korea, Democratic People's Republic of Korea, Madagascar, Malaysia, Myanmar, Philippines, Taiwan, and Vietnam **and** include branches, stems, or root collars with diameters **greater than** 10mm, PROHIBIT ENTRY. Authority: 7 CFR 319.37 and Federal Order DA-2013-18 effective May 20, 2013.

Table 3-16 Cut Conifer Christmas Trees, Boughs, Wreaths, or Garlands from Mexico

If the cut articles are:	And from the Mexican State of:	And the genus is:	And there are:	Then:	Authority:
Christmas trees	→		→	PROHIBIT ENTRY	7 CFR 319.40
Boughs, wreaths, or garlands	Baja California Norte, Chihuahua, Coahuila, Nuevo León, Sonora, or Tamaulipas	*Pinus* (pine)	**Two** or **three** needles in a cluster	PROHIBIT ENTRY	7 CFR 319.37
			Five needles in a cluster	INSPECT and RELEASE	7 CFR 330.105
		◆*Abies* (fir) ◆Cathaya ◆*Cedrus* (cedar) ◆*Juniperus* (juniper) ◆Keteleeria ◆*Larix* (larch) ◆*Picea* (spruce) ◆*Pseudolarix* (golden larch) ◆*Pseudotsuga* (Douglas fir) ◆*Tsuga* (hemlock)	→	PROHIBIT ENTRY	7 CFR 319.37
		Other than one listed above	→	INSPECT and RELEASE	7 CFR 330.105
	State **other than** listed above	→		PROHIBIT ENTRY	7 CFR 319.40

Table 3-17 Cut Conifer Christmas Trees, Boughs, Wreaths, or Garlands from Canada

If:	Then:
A pine species (e.g., white pine, Scotch pine, or Scots pine)	GO to Table 3-18
Not a pine species (e.g., fir, spruce, hemlock, Douglas fir)[1]	GO to Table 3-23

1 Conifer branches from species **other than** pine and less than 15 mm (1/2 inch) in diameter are **exempt** from gypsy moth certification requirements and may be released.

Table 3-18 Cut Pine Christmas Trees or Branches[1]

If from:	And:	Then:	Authority:
New Brunswick, Nova Scotia, or Prince Edward Island	→	GO to Table 3-19	
Ontario or Quebec	→	GO to Table 3-21	

Table 3-18 Cut Pine Christmas Trees or Branches[1]

If from:	And:	Then:	Authority:
A Province **other than** those listed above	**All** of the following requirements are met: 1. The trees are accompanied by a certification of origin[2] stating they were produced in an area of Canada in which gypsy moth is **not** known to occur 2. The trees are accompanied by a statement of origin and movement[3] specifying the Canadian Province from which the trees originated and, if applicable, the Province or Provinces through which they were moved, if different from the Province of origin, and also states that: A. The trees originated in and were moved **only** through areas of Canada **not** considered to be infested with pine shoot beetle as determined by the Canadian Food Inspection Agency (CFIA), **or** B. The trees originated from a Province **not** quarantined for pine shoot beetle and are moved through a Province that **is** infested with pine shoot beetle during October, November, or December, or when ambient air temperature is below 10 °C (50 °F) (the shipment does **not** have to be covered or in an enclosed container) 3. The U.S. destination (including county and State) is plainly indicated on the trees or on the outer covering or container	INSPECT and RELEASE[4]	7 CFR 330.105
	Lacks the documents and indication of destination described above	PROHIBIT ENTRY	7 CFR 319.40 and 7 CFR 319.77

1 Cut pine Christmas trees or branches of Canadian origin are subject to requirements for both gypsy moth and pine shoot beetle. Because the entry requirements are complex and are based on place of origin in Canada as well as place of destination in the U.S., determine the requirements for gypsy moth first, then determine the requirements for pine shoot beetle.

2 The certification of origin for gypsy moth is a signed, accurate statement certifying the area in which the trees were grown. The statement may be provided directly on the documents accompanying the tree shipment, or may be provided on a separate document. The certification does **not** require the signature of a CFIA inspector; exporters may sign the statement.

3 The statement of origin and movement for pine shoot beetle may be provided directly on the documents accompanying the tree shipment, or may be provided on a separate document. The certification does **not** require the signature of a CFIA inspector; exporters may sign the document.

4 If the trees are to be moved through an area of the U.S. quarantined for pine shoot beetle en route to an area or areas in the U.S. **not** quarantined for pine shoot beetle during the period of January through September when the temperature is 10 °C (50 °F) or higher, the trees **must** be shipped in an enclosed vehicle or completely covered (such as with plastic canvas or other closely woven cloth) so as to prevent access by pine shoot beetle.

Table 3-19 Cut PINE Christmas Trees or Branches from New Brunswick, Nova Scotia, or Prince Edward Island—Gypsy Moth Requirements

If from a:	And destined to a:	And:	Then:	Authority:
Canadian area infested with gypsy moth	U.S. area infested with gypsy moth[1]	→	GO to Table 3-20	
	U.S. area **not** infested with gypsy moth	Accompanied by a Canadian phytosanitary certificate with **one** of the following additional declarations: ◆"The trees have been inspected and found free of gypsy moth." **or** ◆"The trees have been treated for gypsy moth in accordance with the PPQ Treatment Manual."		
		Lacks the above certification	PROHIBIT ENTRY	7 CFR 319.77
Canadian area **not** infested with gypsy moth	U.S. area infested with gypsy moth[1]	→	GO to Table 3-20	
	U.S. area **not** infested with gypsy moth	Accompanied by a certification of origin[2] stating that the trees were produced in an area of Canada in which gypsy moth is **not** known to occur		
		Lacks the above certification	PROHIBIT ENTRY	7 CFR 319.77

1 Trees destined to a gypsy moth-infested area, but moving through a U.S. noninfested area (other than noninfested areas in the counties of Aroostock, Franklin, Oxford, Penobscot, Piscataquis, and Somerset, ME) must meet entry requirements for trees destined to gypsy moth-noninfested areas.

2 The certification of origin is a signed, accurate statement certifying the area in which the trees were grown and stating the trees were produced in an area of Canada in which gypsy moth is **not** known to occur. The statement may be provided directly on the documents accompanying the tree shipment, or may be provided on a separate document. The certification does **not** require the signature of a CFIA inspector; exporters may sign the statement.

Table 3-20 Cut PINE Christmas Trees or Branches from New Brunswick, Nova Scotia, or Prince Edward Island—Pine Shoot Beetle Requirements

If the:	And:	Then:	Authority:
Trees are moved through an area of Canada or the U.S. quarantined for pine shoot beetle	**Both** of the following conditions are met: 1. The trees are accompanied by a statement of origin and movement specifying the Province in which the trees originated and, if applicable, the Province or Provinces through which they were moved, if different from the Province of origin, **and** A. The trees are moved through the quarantined area during October, November, or December, or when ambient air temperature is below 10 °C (50 °F) **or** B. The trees are moved during the period of January through September when the temperature is 10 °C (50 °F) or higher, and are shipped in an enclosed vehicle or completely covered (such as with plastic canvas or other closely woven cloth) so as to prevent access by pine shoot beetle 2. The U.S. destination (including county and State) is plainly indicated on the regulated articles or, if applicable, on the outer cover, packaging, or container	INSPECT and RELEASE	7 CFR 330.105
	Both of the conditions above are not met	PROHIBIT ENTRY	7 CFR 319.40
Trees are moved through an area of Canada or the U.S. **not** quarantined for pine shoot beetle	Both of the following conditions are met: 1. The trees are accompanied by a statement of origin and movement specifying the Province from which the trees originated and, if applicable, the Province or Provinces through which they were moved, if different from the Province of origin, and also states that the trees originated in and were **only** moved through Provinces of Canada **not** considered infested or partially infested with pine shoot beetle as determined by the CFIA **and** 2. The U.S. destination (including county and State) is plainly indicated on the regulated articles or, if applicable, on the outer covering, packaging, or container	INSPECT and RELEASE	7 CFR 330.105
	Both of the conditions above are **not** met	PROHIBIT ENTRY	7 CFR 319.40

Table 3-21 Cut PINE Christmas Trees or Branches from Ontario or Quebec—Gypsy Moth Requirements

If from a:	And destined to a:	And:	Then:	Authority:
Canadian area infested with gypsy moth	U.S. area infested with gypsy moth[1]	→	GO to Table 3-22	
	U.S. area **not** infested with gypsy moth	Accompanied by a Canadian phytosanitary certificate with **one** of the following additional declarations: ◆"The trees have been inspected and found free of gypsy moth." **or** ◆"The trees have been treated for gypsy moth in accordance with the PPQ Treatment Manual."		
		Lacks the above certification	PROHIBIT ENTRY	7 CFR 319.77
Canadian area **not** infested with gypsy moth	U.S. area infested with gypsy moth[1]	→	GO to Table 3-22	
	U.S. area **not** infested with gypsy moth	Accompanied by a certification of origin[2] stating the trees were produced in an area of Canada in which gypsy moth is **not** known to occur		
		Lacks the above certification	PROHIBIT ENTRY	7 CFR 319.77

1 Trees destined to a gypsy moth-infested area, but moving through a U.S. noninfested area (other than noninfested areas in the counties of Aroostock, Franklin, Oxford, Penobscot, Piscataquis, and Somerset, ME) must meet entry requirements for trees destined to gypsy moth-noninfested areas.

2 The certification of origin is a signed, accurate statement certifying the area in which the trees were grown, and stating the trees were produced in an area of Canada in which gypsy moth is not known to occur. The statement may be provided directly on the documents accompanying the tree shipment, or may be provided on a separate document. The certification does **not** require the signature of a CFIA inspector; exporters may sign the statement.

Table 3-22 Cut PINE Christmas Trees or Branches from Ontario or Quebec—Pine Shoot Beetle Requirements

If destined to a:	And:	Then:	Authority:
U.S. area infested with pine shoot beetle	**Both** of the following conditions are met: 1. The trees are accompanied by a statement of origin and movement[1] specifying the Province from which the trees originated and, if applicable, the Province or Provinces through which they were moved, if different from the Province of origin, and also states that the trees originated in and were moved through one or more Canadian Provinces considered to be infested or partially infested with pine shoot beetle, as determined by the CFIA **and** 2. The U.S. destination (including county and State) is plainly indicated on the regulated articles or, if applicable, on the outer covering, packaging, or container	INSPECT and RELEASE	7 CFR 330.105
	Both of the conditions in the above cell are **not** met	PROHIBIT ENTRY	7 CFR 319.40
U.S. area **not** infested with pine shoot beetle	**Both** of the following conditions are met: 1. The trees are accompanied by a Canadian phytosanitary certificate specifying the Canadian Province from which the trees originated and, if applicable, the Province or Provinces through which they were moved, if different from the Province of origin. The treatment section of the certificate must indicate that the trees have been treated with methyl bromide (MB) to kill the pine shoot beetle (*Tomicus piniperda*). If the trees have **not** been treated with MB, the certificate must contain **one** of the following additional declarations: ❖"These regulated articles were grown on a plantation with a program to control or eradicate pine shoot beetle (*Tomicus piniperda*) and have been inspected and are considered to be free from pine shoot beetle" **or** ❖"These regulated articles originated in an area in which pine shoot beetle (*Tomicus piniperda*) is **not** considered to be present, as determined by the CFIA" **or** ❖"These regulated articles are 100% inspected and found to be free from pine shoot beetle (*Tomicus piniperda*)" 2. The U.S. destination (including county and State) is plainly indicated on the trees or on the outer covering or container	INSPECT and RELEASE[2]	7 CFR 330.105
	Both of the conditions in the above cell are not met	PROHIBIT ENTRY	7 CFR 319.40

1 The statement of origin and movement for pine shoot beetle may be provided directly on the documentation accompanying the tree shipment, or may be provided on a separate document. The certification does **not** require the signature of a CFIA inspector; exporters may sign the document.

2 If the trees are to be moved through an area of the U.S. quarantined for pine shoot beetle, en route to an area or areas in the U.S. **not** quarantined for pine shoot beetle during the period of January through September when the temperature is 10 °C (50 °F) or higher, the trees must be shipped in an enclosed vehicle or completely covered (such as with plastic canvas or other closely woven cloth) so as to prevent access by pine shoot beetle.

Table 3-23 Cut Christmas Trees or Branches OTHER THAN Pine

If from a:	And destined to a:	And:	Then:	Authority:
Canadian area infested with gypsy moth	U.S. area infested with gypsy moth[1]	→	INSPECT and RELEASE	7 CFR 330.105
	U.S. area **not** infested with gypsy moth	Accompanied by a Canadian phytosanitary certificate with **one** of the following additional declarations: ◆"The trees have been inspected and found free of gypsy moth." **or** ◆"The trees have been treated for gypsy moth in accordance with the PPQ Treatment Manual."		
		Lacks the above certification	PROHIBIT ENTRY	7 CFR 319.77
Canadian area **not** infested with gypsy moth	U.S. area infested with gypsy moth[1]	→	INSPECT and RELEASE	7 CFR 330.105
	U.S. area **not** infested with gypsy moth	Accompanied by a certification of origin[2] stating the trees were produced in an area of Canada in which gypsy moth is **not** known to occur		
		Lacks the above certification	PROHIBIT ENTRY	7 CFR 319.77

1 Trees destined to a gypsy moth-infested area, but moving through a U.S. noninfested area (other than noninfested areas in the counties of Aroostock, Franklin, Oxford, Penobscot, Piscataquis, and Somerset, ME) must meet entry requirements for trees destined to gypsy moth-noninfested areas.

2 The certification of origin is a signed, accurate statement certifying the area in which the trees were grown, and stating the trees were produced in an area of Canada in which gypsy moth is **not** known to occur. The statement may be provided directly on the documents accompanying the tree shipment, or may be provided on a separate document. The certification does **not** require the signature of a CFIA inspector; exporters may sign the statement.

Cordyline spp., Asparagaceae

Cordyline spp. includes cabbage tree and its plants. Use Table 3-24 to regulate fresh, cut articles of *Cordyline* spp.

Table 3-24 *Cordyline* spp. Asparagaceae

If the cut articles are:	And are:	Then:	Authority:
Solely flower panicles	→	INSPECT and RELEASE	7 CFR 319.74
Canes with or without leaves, shoots, or roots	**Solely** canes	GO to Table 3-25 on page 3-23	
	Part of a mixed flower bouquet	GO to Table 3-26 on page 3-24	

Table 3-25 *Cordyline* spp. Consignments Consisting of Solely Canes

If the canes:	And the cane length is:	And the consignment includes:	And:	Then:	Authority:
Have leaves or roots	18 inches or less	Up to 12 canes	Accompanied by a phytosanitary certificate	INSPECT and RELEASE	7 CFR 319.37
			Lacks a phytosanitary certificate	PROHIBIT ENTRY	
		13 or more canes	Accompanied by a phytosanitary certificate	1. AUTHORIZE movement to local Plant Inspection Station 2. CONTACT PPQ	
			Lacks a phytosanitary certificate	PROHIBIT ENTRY	
	More than 18 inches	→			
Have **neither** leaves **nor** roots	6 feet or less	Up to 12 canes	Accompanied by a phytosanitary certificate	INSPECT and RELEASE	
			Lacks a phytosanitary certificate	PROHIBIT ENTRY	
		13 or more canes	Accompanied by a phytosanitary certificate	1. AUTHORIZE movement to local Plant Inspection Station 2. CONTACT PPQ	
			Lacks a phytosanitary certificate	PROHIBIT ENTRY	
	More than 6 feet	→			

Table 3-26 *Cordyline* spp. Canes in Mixed Flower Bouquets

If the cane length is:	And the consignment includes:	And:	And:	Then:	Authority:
18 inches or less	12 or fewer *Cordyline* canes	With or without leaves, shoots, or roots	Accompanied by a phytosanitary certificate	INSPECT and RELEASE	7 CFR 319.37
			Lacks phytosanitary certificate	PROHIBIT ENTRY	
	13 or more *Cordyline* canes	With or without leaves, shoots, or roots	Accompanied by a phytosanitary certificate	1. AUTHORIZE movement to local Plant Inspection Station 2. CONTACT PPQ	
			Lacks phytosanitary certificate	PROHIBIT ENTRY	
More than 18 inches	12 or fewer *Cordyline* canes smaller than 6 feet long and 4 inches wide	**Without** leaves, shoots, or roots	Accompanied by a phytosanitary certificate	INSPECT and RELEASE	
			Lacks phytosanitary certificate	PROHIBIT ENTRY	
		With leaves, shoots, or roots	→		
	13 or more *Cordyline* canes smaller than 6 feet long and 4 inches wide	**Without** leaves, shoots, or roots	Accompanied by a phytosanitary certificate	1. AUTHORIZE movement to local Plant Inspection Station 2. CONTACT PPQ	
			Lacks phytosanitary certificate	PROHIBIT ENTRY	
		With leaves, shoots, or roots	→		
	Cordyline canes larger than 6 feet long or 4 inches wide	With or without leaves, shoots, or roots	→		

Cotoneaster spp., Rosaceae

The fruits are regulated to prevent exotic fruit flies from entering. In addition, *Cotoneaster* spp. are regulated because they are hosts of *Anoplophora chinensis*, citrus longhorned beetle (CLB) and *Anoplophora glabripennis*, Asian longhorned beetle (ALB), both destructive, wood-boring pests. Use Table 3-27 on page 3-25 to regulate fresh cut articles of *Cotoneaster* spp. (**with** or **without** berries).

Table 3-27 *Cotoneaster* spp., Rosaceae

If the fresh cut articles are:	And are grown in:	And the shipment:	Then:	Authority:
With berries	Canada, Chile, or New Zealand	→	INSPECT and RELEASE	7 CFR 319.56
	Netherlands	Is accompanied by a foreign phytosanitary certificate[1] showing the name and address of the grower in the Netherlands[2] and the branches are 10mm **or less** in diameter	REQUIRE an import permit[3] INSPECT and RELEASE	
		Lacks a foreign phytosanitary certificate1 or the grower is **not** clearly indicated as in the Netherlands **or** the branches are **greater than** 10mm in diameter	PROHIBIT ENTRY	
	Country **other than** listed above	→		
Without berries and include branches, stems, or root collars with diameters 10mm **or less**	All countries	→	INSPECT and RELEASE	7 CFR 319.74
Without berries and include branches, stems, or root collars with diameters **greater than** 10mm	Afghanistan, China, Croatia, Democratic People's Republic of Korea, European Union[4], Indonesia, Japan, Madagascar, Malaysia, Myanmar, Philippines, Republic of Korea, Switzerland, Taiwan, or Vietnam	→	PROHIBIT ENTRY	7 CFR 319.37 and Federal Order DA-2011-18, effective May 11, 2011

1 A foreign phytosanitary certificate is required to ensure that *Cotoneaster* spp. are grown in a country free from fruit flies.

2 The name of the grower's village satisfies the address requirement.

3 If the importer ***lacks*** an import permit and the shipment is noncommercial and can be 100% inspected, the permit requirement may be waived. Otherwise, HOLD the shipment and direct the importer to apply for a permit (*see* Appendix A, Permits and Foreign Phytosanitary Certificates on page A-1 for instructions and information about permits).

4 Member States include Austria, Belgium, Bulgaria, Cyprus, Czech Republic, Denmark, Estonia, Finland, France, Germany, Greece, Hungary, Ireland, Italy, Latvia, Lithuania, Luxembourg, Malta, Netherlands, Poland, Portugal, Romania, Slovakia, Slovenia, Spain, Sweden, United Kingdom.

Crocosmia spp. (autumn-gold, garden montbretia, montbretia), Iridaceae

Per DA-2015-20, APHIS no longer regulates gladiolus rust, *Uromyces transversalis*. APHIS will continue to regulate other rust pathogens that are **not** known to occur in the United States.

Cupressaceae

See Coniferae on page 3-14.

Cycadaceae/Zamiaceae (cycads)

All cycads are listed in CITES Appendix II, **except** those specifically listed in CITES Appendix I. For a list of all genera and species of cycads, refer to GRIN Genera of Cycadaceae and GRIN Genera of Zamiaceae.

Cycad leaves and fronds are regulated because unrestricted trade could threaten them with extinction. Use Table 3-28 to regulate the fresh, cut leaves and fronds of Cycadaceae/Zamiaceae.

Table 3-28 Cycadaceae/Zamiaceae (cycads)

If the leaves/ fronds are:	And the cycad is:	Then:	Authority:
Entering at a CITES designated port	Listed in CITES Appendix I, including the following species: ◆*Ceratozamia* spp. ◆*Chigua* spp. ◆*Cycas beddomei* ◆*Encephalartos* spp. ◆*Microcycas calocoma*	1. REGULATE as CITES Appendix I 2. REQUIRE a CITES import permit from U.S. Fish and Wildlife Service (FWS), a valid CITES export permit from the country of export, and a Protected Plant Permit from USDA APHIS	50 CFR 23
	Not listed in CITES Appendix I	1. REGULATE as CITES Appendix II 2. REQUIRE a valid CITES export permit from the country of export and a Protected Plant Permit from USDA APHIS	
Not entering at a CITES designated port	Accompanied by CITES documents	1. SAFEGUARD under plant quarantines and plant pest regulations 2. GIVE the importer **one** of the following options: A. **Reexport** the articles to the country of origin; or B. **Reroute** the articles to a CITES designated port ***NOTE***: Shipping and handling charges are the responsibility of the importer.	7 CFR 355 50 CFR 23
	Not accompanied by CITES documents	1. HOLD the shipment 2. INITIATE seizure and forfeiture actions	

Cydonia spp. (quince), Rosaceae

Cydonia spp. are PROHIBITED because they are hosts to a diversity of exotic diseases and pests. Use Table 3-29 to regulate fresh cut articles of *Cydonia* spp.

Table 3-29 *Cydonia* spp. (flowering quince) Rosaceae

If the articles are grown in:	And the articles are:	Then:	Authority:
All countries	Branches with or without foliage or blooms	PROHIBIT ENTRY	7 CFR 319.37

Cynara spp. (artichoke),[1] Asteraceae

Flowers of *Cynara* spp. are regulated to prevent the entry of exotic fruit flies. Use Table 3-30 to regulate fresh, cut articles of *Cynara* spp.

Table 3-30 *Cynara* spp. (artichoke) Asteraceae

If the cut articles are:	And are grown in:	Then:	Authority:
Leaves and stems **only**	→	REQUIRE an import permit INSPECT and RELEASE	7 CFR 330.105
Mature or immature stems with floral heads	Canada		
	Country **other than** Canada	REQUIRE an import permit[1]	7 CFR 319.56

1 If the importer **lacks** an import permit and the shipment is noncommercial and can be 100% inspected, the permit requirement may be waived (if the floral head is admissible under Q56 from the country). Otherwise, HOLD the shipment and direct the importer to apply for a permit (if the floral head is admissible under Q56 from the country) (*see* Appendix A, Permits and Foreign Phytosanitary Certificates on page A-1 for instructions and information about permits).

1 Use the FAVIR database to determine if artichokes are admissible from the country. If admissible, INSPECT and RELEASE.

Dracaena spp., Asparagaceae

Dracaena spp. includes dragon tree, isikonkwane, lucky bamboo, palmillo, and son-of-India. The Centers for Disease Control (CDC) has an embargo on *Dracaena* shipments imported in water, which could introduce mosquito species **not** widely seen in the United States. The embargo **does not** affect shipments in non-water media. Use Table 3-31 to regulate fresh, cut articles of *Dracaena* spp.

NOTICE

If you find water, REFER the case to CBP Customs for the enforcement of the CDC embargo.

***Table 3-31 Dracaena* spp. Asparagaceae**

If the cut articles are:	And are from:	Then:	Authority:
Solely flower panicles	→	INSPECT and RELEASE	7 CFR 319.74
Solely canes, or canes and leaves	Costa Rica	GO to Table 3-32 on page 3-29	7 CFR 319.37
	A country **other than** Costa Rica	GO to Table 3-33 on page 3-30	

***Table 3-32 Dracaena* spp. Canes only or Canes with Leaves from Costa Rica**

If:	And the consignment includes:	And:	Then:	Authority:
Canes **only**	12 or fewer *Dracaena* canes	→	INSPECT and RELEASE	7 CFR 319.37
	13 or more *Dracaena* canes	→	1. AUTHORIZE movement to local Plant Inspection Station 2. USE the Plants for Planting Manual to regulate	
Canes are **with leaves** and are 54 inches or less (no restriction to diameter size)	12 or fewer *Dracaena* canes	From an APHIS-approved facility and accompanied by a phytosanitary certificate with an additional declaration (AD) that "The plants in this consignment have been produced, packed, stored, and exported in accordance with the requirements of 7 CFR 319.37-5 (y) and the bilateral workplan, and the consignment has been inspected and found free of quarantine pests." See "*Dracaena* Program" in the Plants for Planting Manual for more information.	INSPECT and RELEASE	
		Not from an APHIS-approved facility or **lacks** above documentation	PROHIBIT ENTRY	
	13 or more *Dracaena* canes	From an APHIS-approved facility and accompanied by a phytosanitary certificate with an additional declaration (AD) that "The plants in this consignment have been produced, packed, stored, and exported in accordance with the requirements of of 7 CFR 319.37-5(y) and the bilateral workplan, and the consignment has been inspected and found free of quarantine pests." See "*Dracaena* Program" in the Plants for Planting Manual for more information.	1. AUTHORIZE movement to local Plant Inspection Station 2. CONTACT PPQ	
		Not from an APHIS-approved facility or **lacks** above documentation	PROHIBIT ENTRY	
Canes are **with leaves** and are more than 54 inches	→	→		

***Table 3-33 Dracaena* spp. Canes with or without Leaves, Shoots or Roots from Countries Other Than Costa Rica**

If the cane length is:	And the consignment includes:	And:	And:	Then:	Authority:
18 inches or less	12 or fewer *Dracaena* canes	With or without leaves, shoots, or roots	Accompanied by a phytosanitary certificate	INSPECT and RELEASE	7 CFR 319.37
			Lacks phytosanitary certificate	PROHIBIT ENTRY	
	13 or more *Dracaena* canes	With or without leaves, shoots, or roots	Accompanied by a phytosanitary certificate	1. AUTHORIZE movement to local Plant Inspection Station 2. CONTACT PPQ	
			Lacks phytosanitary certificate	PROHIBIT ENTRY	
More than 18 inches	12 or fewer *Dracaena* canes smaller than 6 feet long and 4 inches wide	**Without** leaves, shoots, or roots	Accompanied by a phytosanitary certificate	INSPECT and RELEASE	
			Lacks phytosanitary certificate	PROHIBIT ENTRY	
		With leaves, shoots, or roots	→		
	13 or more *Dracaena* canes smaller than 6 feet long and 4 inches wide	**Without** leaves, shoots, or roots	Accompanied by a phytosanitary certificate	1. AUTHORIZE movement to local Plant Inspection Station 2. CONTACT PPQ	
			Lacks phytosanitary certificate	PROHIBIT ENTRY	
		With leaves, shoots, or roots	→		
	Dracaena canes larger than 6 feet long or 4 inches wide	With or without leaves, shoots, or roots	→		

Fortunella spp. (kumquat), Rutaceae

See Rutaceae (citrus) on page 3-51.

Fraxinus spp. (ash), Oleaceae

Fraxinus spp. are PROHIBITED from all countries **except** any county or municipal regional county in Canada not regulated for *Agrilus planipennis*, emerald ash borer (EAB). In addition, *Fraxinus* spp. are regulated because they are hosts of *Anoplophora chinensis*, citrus longhorned beetle (CLB) and *Anoplophora glabripennis*, Asian longhorned beetle (ALB), both destructive, wood-boring pests. Use Table 3-34 to regulate fresh cut articles of *Fraxinus* spp.

Table 3-34 *Fraxinus* spp. (ash), Oleaceae

If the articles are grown in:	And the articles are:	Then:	Authority:
An area of Canada where EAB is absent	All plant parts **except** seeds	INSPECT and RELEASE	7 CFR 319.37
An area of Canada where EAB is present	All plant parts **except** seeds	PROHIBIT ENTRY	
A country **other than** Canada	All plant parts **except** seeds	PROHIBIT ENTRY	7 CFR 319.37 and Federal Order DA-2013-18 effective May 20, 2013

Gladiolus spp., Iridaceae

Per DA-2015-20, APHIS no longer regulates gladiolus rust, *Uromyces transversalis*. APHIS will continue to regulate other rust pathogens that are **not** known to occur in the United States.

Gossypium spp. (cotton), Malvaceae

Cotton is regulated from all countries to prevent the entry of pink bollworm, *Pectinophora gossypiella*. Use Table 3-35 to regulate fresh, cut articles of *Gossypium* spp.

Table 3-35 *Gossypium* spp. (cotton) Malvaceae

If destined to:	Then:	Authority:
Guam or the Commonwealth of the Northern Mariana Islands (CNMI)	INSPECT and RELEASE	7 CFR 319.8
State or territory **other than** Guam or CNMI	PROHIBIT ENTRY	

Helleborus spp. (black helleborus, Christmas-rose, green hellebore, lenten-rose, stinking hellebore), Ranunculaceae

INSPECT and RELEASE stems, leaves, or inflorescences, including cut flowers with fruits attached, of *Helleborus* spp. *Helleborus* is **not** a known host for fruit flies. For cut flowers with fruits, the authority is 7 CFR 319.56; for cut flowers free from fruits, the authority is 7 CFR 319.74.

Hibiscus spp. (giant mallow, rose mallow), Malvaceae

Hibiscus spp. are PROHIBITED from certain countries to prevent the entry of pink bollworm, *Pectinophora gossypiella*. In addition, *Hibiscus* spp. are regulated because they are hosts of *Anoplophora chinensis*, citrus longhorned beetle (CLB) and *Anoplophora glabripennis*, Asian longhorned beetle (ALB), both destructive, wood-boring pests. Use Table 3-36 to regulate fresh cut articles of *Hibiscus* spp. For processed (dried/dyed) hibiscus, refer to the *Miscellaneous and Processed Products Manual*.

Table 3-36 *Hibiscus* spp. (giant mallow, rose mallow), Malvaceae

If the articles are grown in:	And the articles are:	Then:	Authority:
Africa (all countries), Brazil, or India	→	PROHIBIT ENTRY	7 CFR 319.37 and Federal Order DA-2013-18 effective May 20, 2013
Afghanistan, China, Croatia, Democratic People's Republic of Korea, European Union[1], Indonesia, Japan, Madagascar, Malaysia, Myanmar, Philippines, Republic of Korea, Switzerland, Taiwan, or Vietnam	Branches or stems **greater than** 10mm in diameter		
	Branches or stems 10mm in diameter **or less**	INSPECT and RELEASE	
A country **other than** listed above	Branches, stems with pod attached (otherwise unprocessed)		

1 Member States include Austria, Belgium, Bulgaria, Cyprus, Czech Republic, Denmark, Estonia, Finland, France, Germany, Greece, Hungary, Ireland, Italy, Latvia, Lithuania, Luxembourg, Malta, Netherlands, Poland, Portugal, Romania, Slovakia, Slovenia, Spain, Sweden, United Kingdom.

Hippophae spp. (sea buckthorn), Elaeagnaceae

Fruits of *Hippophae* spp. are regulated to prevent the entry of exotic fruit flies. Use Table 3-37 to regulate fresh, cut articles of *Hippophae* spp.

Table 3-37 *Hippophae* spp. (sea buckthorn) Elaeagnaceae

If the cut articles are with:	And were grown in:	And the shipment:	Then:	Authority:
Stems, leaves, or inflorescences **only**; **never** with fruits	→	→	INSPECT and RELEASE	7 CFR 319.74
Botanical fruits; stems with fruits attached	◆Canada ◆Chile ◆New Zealand	→	INSPECT and RELEASE	7 CFR 319.56
	Netherlands	Is accompanied by a foreign phytosanitary certificate[1] showing the name and address of the grower in the Netherlands[2]	1. REQUIRE an import permit[3] 2. INSPECT and RELEASE	
		Lacks a foreign phytosanitary certificate or the grower is **not** clearly indicated as in the Netherlands	PROHIBIT ENTRY	
	Country **other than** listed above	→		

1 A foreign phytosanitary certificate is required to ensure that *Hippophae* spp. are grown in a country free from fruit flies.

2 The name of the grower's village satisfies the address requirement.

3 If the importer **lacks** an import permit and the shipment is noncommercial and can be 100% inspected, the permit requirement may be waived. Otherwise, HOLD the shipment and direct the importer to apply for a permit (*see* Appendix A, Permits and Foreign Phytosanitary Certificates on page A-1 for instruction and information about permits).

Hypericum spp. (St. John's wort), Clusiaceae

INSPECT and RELEASE stems, leaves, or inflorescences, including cut flowers with fruits attached, of *Hypericum* spp. *Hypericum* is **not** a known host for fruit flies. For cut flowers with fruits, the authority is 7 CFR 319.56; for cut flowers free from fruits, the authority is 7 CFR 319.74.

Ilex spp. (holly, inkberry, winterberry), Aquifoliaceae

Holly fruits are regulated to prevent exotic fruit flies from entering. In addition, *Ilex* spp. are regulated because they are hosts of *Anoplophora chinensis*, citrus longhorned beetle (CLB) and *Anoplophora glabripennis*, Asian longhorned beetle (ALB), both destructive, wood-boring pests. Use Table 3-38 to regulate fresh cut articles of *Ilex* spp. (**with** or **without** berries).

Table 3-38 *Ilex* spp. (holly) Aquifoliaceae

If the fresh cut articles are:	And are grown in:	And the shipment:	Then:	Authority:
With berries	Canada, Chile, or New Zealand	→	INSPECT and RELEASE	7 CFR 319.56
	Netherlands	Is accompanied by a foreign phytosanitary certificate[1] showing the name and address of the grower in the Netherlands[2] and the branches are 10 mm **or less** in diameter	1. REQUIRE an import permit[3] 2. INSPECT and RELEASE	
		Lacks a foreign phytosanitary certificate1 or the grower is not clearly indicated as in the Netherlands **or** the branches are **greater than** 10 mm in diameter	PROHIBIT ENTRY	
	Country **other than** listed above	→		
Without berries and include branches or stems 10mm **or less** in diameter	All countries	→	INSPECT and RELEASE	7 CFR 319.74
Without berries and include branches or stems **greater than** 10mm in diameter	Afghanistan, China, Croatia, Democratic People's Republic of Korea, European Union[4], Indonesia, Japan, Madagascar, Malaysia, Myanmar, Philippines, Republic of Korea, Switzerland, Taiwan, or Vietnam	→	PROHIBIT ENTRY	7 CFR 319.37 and Federal Order DA-2013-18 effective May 20, 2013

1 A foreign phytosanitary certificate is required to ensure that *Ilex* spp. are grown in a country free from fruit flies.

2 The name of the grower's village satisfies the address requirement.

3 If the importer **lacks** an import permit and the shipment is noncommercial and can be 100% inspected, the permit requirement may be waived. Otherwise, HOLD the shipment and direct the importer to apply for a permit (*see* Appendix A, Permits and Foreign Phytosanitary Certificates on page A-1 for instructions and information about permits).

4 Member States include Austria, Belgium, Bulgaria, Cyprus, Czech Republic, Denmark, Estonia, Finland, France, Germany, Greece, Hungary, Ireland, Italy, Latvia, Lithuania, Luxembourg, Malta, Netherlands, Poland, Portugal, Romania, Slovakia, Slovenia, Spain, Sweden, United Kingdom.

Juniperus spp. (juniper), Cupressaceae

See Coniferae on page 3-14.

Leucanthemella spp. (high daisy, giant daisy, max-chrysanthemum, Shasta daisy), Asteraceae

NOTICE

Chrysanthemum white rust may be recognized by small white to yellow spots, up to 4 mm wide, on the upper surface of the leaf. Buff to pink-colored pustules may form on the underside of the leaf.

Use Table 3-39 to regulate fresh, cut articles identified as *Leucanthemella* spp.

Table 3-39 *Leucanthemella* spp. (high daisy, giant-daisy, max-chrysanthemum, Shasta daisy) Asteraceae

If the flowers were harvested in:	And the consignment is:	Then:	Authority:
Andorra; Argentina; Australia; Austria; Belarus; Belgium; Bosnia and Herzegovina; Brazil; Brunei; Bulgaria; Canary Islands; Chile; China; Colombia; Croatia; Cyprus; Czech Republic; Denmark; Ecuador; Estonia; Finland; France; Germany; Greece; Hungary; Iceland; Ireland; Italy; Japan; Korea; Kosovo; Latvia; Liechtenstein; Lithuania; Luxembourg; Macedonia; Malaysia; Malta; Mexico; Moldova; Monaco; Montenegro; Netherlands; New Zealand; Norway; Peru; Poland; Portugal; Republic of South Africa; Romania, Russia; San Marino; Serbia; Slovakia; Slovenia; Spain; Sweden; Switzerland; Taiwan; Thailand; Tunisia; Ukraine; United Kingdom; Uruguay; Venezuela, and all countries, territories, and possessions of countries located in part or entirely between 90° and 180° East longitude	Is accompanied by a phytosanitary certificate or equivalent documentation[1] issued by the National Plant Protection Organization of the country of origin or its designee, containing an additional declaration stating, “The place of production as well as the consignment have been inspected and found free of *Puccinia horiana*[2]”	INSPECT and RELEASE	7 CFR 330.105 7 CFR 319.74
	Lacks either the certificate or the certification specified in the cell above	PROHIBIT ENTRY	
Other than a country listed in the cells above	→	INSPECT and RELEASE	

1 Documentation may be written in Spanish. A legible photocopy, facsimile, or scanned copy of an original phytosanitary certificate is acceptable.

2 Statement **does not** need to be word for word, but **must** indicate that both the production site and the consignment have been inspected and found free of *Puccinia horiana*.

Ligustrum spp. (privet), Oleaceae

INSPECT and RELEASE stems, leaves, or inflorescences, including cut flowers with fruits attached, of *Ligustrum* spp. *Ligustrum* is **not** a known host for fruit flies. For cut flowers with fruits, the authority is 7 CFR 319.56; for cut flowers free from fruits, the authority is 7 CFR 319.74.

Loranthaceae (all genera of mistletoe)

Loranthaceae is a plant family that includes the genera and species of mistletoe. Mistletoe is a parasitic plant. For a list of all genera and species of Loranthaceae, refer to GRIN Genera of Loranthaceae.

Use Table 3-40 to regulate fresh, cut articles of Loranthaceae.

Table 3-40 Loranthaceae (all genera of mistletoe)

If the stems are:	And grown in:	Then:	Authority:
With berries	→	PROHIBIT ENTRY	7 CFR 319.56
Without berries	Canada	INSPECT and RELEASE	7 CFR 319.74
	Country **other than** Canada	1. HOLD the shipment 2. CONTACT a PPQ botanist at the nearest PPQ Plant Inspection Station	7 CFR 330

Malus spp. (apple), Rosaceae

Malus spp. are PROHIBITED from all countries because they are hosts to a diversity of exotic diseases and pests. Use Table 3-41 to regulate fresh cut articles of *Malus* spp.

Table 3-41 *Malus* spp. (apple), Rosaceae

If the articles are grown in:	And the articles are:	Then:	Authority:
All countries	Branches with or without foliage or blooms	PROHIBIT ENTRY	7 CFR 319.37

Musa spp. (banana, dwarf banana, flowering banana, plantain), Musaceae

Musa spp. are regulated to prevent the entry of red palm mites. Use Table 3-42 to regulate fresh, cut articles of *Musa* spp.

Table 3-42 *Musa* spp. (banana, dwarf banana, flowering banana, plantain)

If:	And:	Then:	Authority:
Stems, leaves, or inflorescences **only**; **no fruit** at any stage of development present	→	INSPECT and RELEASE[1]	7 CFR 319.74
Fruit is present	Mature (ripe) bananas	PROHIBIT ENTRY	7 CFR 319.56
	Immature (green) bananas	USE FAVIR to Regulate[1]	

1 Look for very small but visible, bright-red mites (red palm mite) and colonies of mites along the midrib of the leaves. Look for evidence of mites feeding: green leaves having bright-green to pale-green, to yellow, and finally, copper-brown streaks or spots. Look for webbing and cast skins of the mites.

Nepenthes spp. (pitcher plant), Nepenthaceae

Nepenthes spp. plants are regulated because unrestricted trade could threaten them with extinction. Use Table 3-43 to regulate the fresh, cut pitchers (modified leaves) of *Nepenthes* spp.

Table 3-43 *Nepenthes* spp.[1] (pitcher plant) Nepenthaceae

If the cut articles are:	And the species is:	Then:	Authority:
Entering at a CITES designated port	*khasiana* or *raja* (giant pitcher plants)	1. HOLD shipment 2. TAKE regulatory action under plant quarantines and plant pest regulations 3. REGULATE as CITES Appendix I 4. REQUIRE a CITES import permit from U.S. Fish and Wildlife Service (FWS), a valid CITES export permit from the country of export, and a Protected Plant Permit from USDA–APHIS	50 CFR 23
	Other than *khasiana* or *raja*	1. HOLD shipment 2. TAKE regulatory action under plant quarantines and plant pest regulations 3. REGULATE as CITES Appendix II 4. REQUIRE a valid CITES export permit from the country of export and a Protected Plant Permit from USDA APHIS	
Not entering at a CITES designated port	Accompanied by CITES documents	1. SAFEGUARD under plant quarantines and plant pests regulations 2. GIVE the importer one of the following options: A. **Reexport** the articles to the country of origin B. **Reroute** the articles to a CITES designated port **NOTE**: Shipping and handling charges are the responsibility of the importer.	7 CFR 319.74 or if from Canada, 7 CFR 330.105 7 CFR 355 50 CFR 23 50 CFR 24
	Not accompanied by CITES documents	1. HOLD shipment 2. INTIATE seizure and forfeiture actions	

1 Refers to the pitcher.

Nigella spp. (fennel-flower, jack-in-the-green, love-in-a-mist, nutmeg-flower), Ranunculaceae

INSPECT and RELEASE stems, leaves, or inflorescences, including cut branches with seed capsules attached, of *Nigella* spp. For cut branches with seed capsules, the authority is 7 CFR 319.56; for cut flowers free from seed capsules, the authority is 7 CFR 319.74.

Nipponanthemum spp. (nippon-daisy, nipon-chrysanthemum), Asteraceae

NOTICE

Chrysanthemum white rust may be recognized by small white to yellow spots, up to 4 mm wide, on the upper surface of the leaf. Buff to pink-colored pustules may form on the underside of the leaf.

Use *Table 3-44* to regulate *Nipponanthemum*.

Table 3-44 *Nipponanthemum* spp. (nippon-daisy, nipon-chrysanthemum) Asteraceae

If the flowers were harvested in:	And the consignment:	Then:	Authority:
Andorra; Argentina; Australia; Austria; Belarus; Belgium; Bosnia and Herzegovina; Brazil; Brunei; Bulgaria; Canary Islands; Chile; China; Colombia; Croatia; Cyprus; Czech Republic; Denmark; Ecuador; Estonia; Finland; France; Germany; Greece; Hungary; Iceland; Ireland; Italy; Japan; Korea; Kosovo; Latvia; Liechtenstein; Lithuania; Luxembourg; Macedonia; Malaysia; Malta; Mexico; Moldova; Monaco; Montenegro; Netherlands; New Zealand; Norway; Peru; Poland; Portugal; Republic of South Africa; Romania; Russia; San Marino; Serbia; Slovakia; Slovenia; Spain; Sweden; Switzerland; Taiwan; Thailand; Tunisia; Ukraine; United Kingdom; Uruguay; Venezuela, and all countries, territories, and possessions of countries located in part or entirely between 90° and 180° East longitude	Is accompanied by a phytosanitary certificate or equivalent documentation [1] issued by the National Plant Protection Organization of the country of origin or its designee containing an additional declaration stating, "The place of production as well as the consignment have been inspected and found free of *Puccinia horiana*[2]"	INSPECT and RELEASE	7 CFR 330.105 7 CFR 319.74
	Lacks either the certificate or the certification specified in the cell above	PROHIBIT ENTRY	
Other than a country listed in the cells above	→	INSPECT and RELEASE	

1 Documentation may be written in Spanish. A legible photocopy, facsimile, or scanned copy of an original phytosanitary certificate is acceptable.

2 Statement **does not** need to be word for word, but **must** indicate that both the production site and the consignment have been inspected and found free of *Puccinia horiana*.

Orchidaceae (orchids)

The great majority of orchids encountered in the trade are from artificially propagated plants; and therefore, fall outside the scope of the CITES regulations. **Neither** permits **nor** certificates are necessary for orchid blossoms from artificially propagated plants. These orchids would include artificially propagated hybrids of *Cymbidium* spp., *Dendrobium* spp., *Phalaenopsis* spp., and *Vanda* spp.

Therefore, INSPECT and RELEASE commercial shipments of cut orchids unless you have convincing proof the orchids were collected in the wild[2]. **Neither** permits **nor** certificates are necessary for orchid blossoms from artificially propagated plants.

For a list of all genera and species of orchids, refer to GRIN Genera of Orchidaceae.

If you have convincing proof that the orchids were wild collected, then:

1. HOLD the shipment.
2. CONTACT a PPQ botanist at the nearest PPQ Plant Inspection Station.

2 Artificially propagated orchids are very clean and consistent in quality and professionally packaged, usually having small water vials on the cut end of the blossom to keep them fresh, rarely having pests or any other quarantine concerns. Wild collected orchids would show signs of wilting and browning or discoloration, insect or handling damage, missing the water vials, probably ***not*** in clean consistent packages, and typically in poor overall condition.

Oryza sativa (rice), Poaceae

Orysa sativa is regulated from all countries to prevent the entry of rice pathogens and insect pests. Use Table 3-45 to regulate fresh, cut articles of *Orysa sativa*.

If the articles are dried, see the *Miscellaneous and Processed Products Import Manual*.

Table 3-45 *Oryza sativa* (rice) Poaceae

If:	And destined to:	Then:	Authority:
Fresh, cut articles	◆Guam ◆Commonwealth of the Northern Mariana Islands (CNMI)	INSPECT and RELEASE	7 CFR 319.55
	State or territory **other than** Guam or CNMI	PROHIBIT ENTRY	
Dried articles	→	SEE the *Miscellaneous and Processed Products Manual*	

Pelargonium spp. (scented geraniums), Geraniaceae

Pelargonium spp. are regulated because they are hosts of the harmful plant pathogen *Ralstonia solanacearum* Race 3 Biovar 2 (R3B2). Use Table 3-46 to regulate fresh cut articles of *Pelargonium* spp.

Table 3-46 *Pelargonium* spp. (scented geraniums) Geraniaceae

If the fresh cut articles are:	And are grown in:	And:	Then:	Authority:
Stems, leaves, or inflorescences	Canada	Accompanied by a Phytosanitary Certificate with the following Additional Declaration, *"Ralstonia solanacearum* race 3 biovar 2 is not known to occur in the country of origin" **OR** Is imported under the provision of the Greenhouse Grown Restricted Plant Program described in 7 CFR 319.37-4(c)	INSPECT and RELEASE	7 CFR 319.37
	Israel	Accompanied by a Phytosanitary Certificate with the following Additional Declaration, "*Ralstonia solanacearum* race 3 biovar 2 is not known to occur in the country of origin"		
	Countries listed on the Approved Pelargonium Facilities List	Accompanied by a Phytosanitary Certificate with the following Additional Declaration, "These articles have been produced in accordance with the requirements in 7 CFR 319.37-5(r)(3)."		
	All countries	**Not** certified as above	PROHIBIT ENTRY	

Pernettya spp. (pernettya), Ericaceae

INSPECT and RELEASE stems, leaves, or inflorescences, including cut flowers with fruits attached, of *Pernettya* spp. *Pernettya* is **not** a known host for fruit flies. For cut flowers with fruits, the authority is 7 CFR 319.56; for cut flowers free from fruits, the authority is 7 CFR 319.74.

Phoenix spp. (date palm), Arecaceae

Leaves of *Phoenix* spp. are regulated because they could introduce Bayoud disease to date palms caused by *Fusarium oxysporum* var. *albedinis*. Use Table 3-47 to regulate fresh, cut leaves of *Phoenix* spp.

Table 3-47 *Phoenix* spp. (date palm) Arecaceae

If the leaves were grown in:	And the importation:	And the shipment:	Then:	Authority:
Algeria or Morocco	→	→	PROHIBIT ENTRY	7 CFR 330.105
Country **other than** listed above	Is **not** of single fronds	Is accompanied by a certificate of origin or phytosanitary certificate issued by the national plant protection organization of the country in which the palm leaves were cut	INSPECT and RELEASE[1]	
		Lacks the above certification	PROHIBIT ENTRY	
	Is of single fronds[2]	→	*See* the *Miscellaneous and Processed Products Manual* and REGULATE as palm fronds and articles	

1 Look along the midrib of the leaves for very small, bright-red mites or colonies of mites. Look for streaking on leaves (pale green to yellow and copper-brown). Also, look for mite webbing and cast skins.

2 Single fronds are usually for personal religious purposes.

Physalis spp. (ground cherry, Chinese-lantern plant, Japanese-lantern), Solanaceae

Fruits of *Physalis* spp. are regulated to prevent entry of the Mediterranean fruit fly, *Ceratitis capitata*. Use Table 3-48 to regulate fresh, cut articles of *Physalis* spp.

Table 3-48 *Physalis* spp. (ground cherry, Chinese-lantern plant, Japanese-lantern) Solanaceae

If with:	And from:	Then:	Authority:
Stems, leaves, or inflorescences **only**; **never** with fruits	→	INSPECT and RELEASE	7 CFR 319.74
Botanical fruits	Canada	INSPECT and RELEASE	7 CFR 319.56
	A country **other than** Canada	USE FAVIR to regulate	

Picea spp. (spruce), Pinaceae

See Coniferae on page 3-14.

Pinaceae

See Coniferae on page 3-14.

Pinus spp. (pine), Pinaceae

See Coniferae on page 3-14.

Poaceae (grasses)

Poaceae is a family that includes all genera and species of grasses. For a list of all genera and species of Poaceae, refer to GRIN Genera of Poaceae. Grasses are regulated to prevent a wide diversity of plant diseases, primarily viruses and rusts from entering.

Use Table 3-49 to regulate fresh, cut articles of Poaceae. If the grasses are dried, see the *Miscellaneous and Processed Products Import Manual*.

Table 3-49 Poaceae (all genera and species of grasses)

If the grasses are grown in:	And the grasses are:	And the shipment is destined to:	And the grasses:	Then:	Authority:
Canada	Bamboo or rice	Guam or the Commonwealth of the Northern Mariana Islands (CNMI)	→	INSPECT and RELEASE	7 CFR 318.82
		Territory of State **other than** Guam or CNMI	→	PROHIBIT ENTRY	7 CFR 319.37 (bamboo) 7 CFR 319.55 (rice)
	Broomcorn or corn and related genera	→	→	For *Sorghum bicolor* (broomcorn), CONTINUE to Table 3-59 on page 3-54	
		→	→	For *Zea mays* (corn and closely related plants), CONTINUE to Table 3-69 on page 3-60	
	Sugarcane	→	→	PROHIBIT ENTRY	7 CFR 319.15
	Federal noxious weeds (FNW)	→	Have seeds	1. HOLD shipment 2. CONTACT a PPQ botanist at the nearest PPQ Plant Inspection Station	
			Lack seeds	INSPECT and RELEASE	7 CFR 330.105
	Other than listed above	→	→		
Country **other than** Canada	→		→	PROHIBIT ENTRY	7 CFR 319.37

Polypodiophyta (ferns)

Two species of fern are regulated because they are noxious weeds and have the potential to cause serious environmental and economic damage to some areas of the United States. Use Table 3-50 to regulate fresh, cut articles of ferns.

Table 3-50 *Polypodiophyta* (Ferns)

If the ferns are:	Then:	Authority:
◆*Lygodium flexuosum* (maidenhair creeper) ◆*Lygodium microphyllum* (old-world climbing fern)	PROHIBIT ENTRY	7 CFR 360 Noxious Weed Regulations
Other than one of the two ferns listed above	INSPECT and RELEASE	7 CFR 319.74

Poncirus spp., Rutaceae

See Rutaceae (citrus) on page 3-51.

Proteaceae (protea)

Proteaceae is a plant family that includes all genera of protea. For a list of all genera and species of Proteaceae, refer to GRIN Genera of Proteaceae. Proteaceae are regulated primarily because of diseases for which there are **not** approved treatments. Use Table 3-51 to regulate fresh, cut articles of all genera of Proteaceae.

Table 3-51 Proteaceae (protea) (page 1 of 2)

If the articles were cut in:	And the shipment:	And the shipment:	Then:	Authority:
Australia, Ireland, New Caledonia, or United Kingdom	Arrived directly from Australia, Ireland, New Caledonia, or united Kingdom	Is accompanied by phytosanitary certification with the additional declaration: "The cut flowers/garlands/wreaths/greenery in this shipment have been inspected and found free of all life stages of light brown apple moth (*Epiphyas postvittana*)."	INSPECT and RELEASE	
		Lacks the above certification	PROHIBIT ENTRY	Emergency measures went into effect 08/04/08
	Arrived from a country **other than** listed above	Is accompanied by a phytosanitary certificate issued by the transiting country's NAPPO officials, with the additional declaration: "The cut flowers/garlands/wreaths/greenery in this shipment have been inspected and found free of all life stages of light brown apple moth (*Epiphyas postvittana*)."	INSPECT and RELEASE	
		Lacks the above certification	PROHIBIT ENTRY	Emergency measures went into effect 08/04/08
Canada	→	→	INSPECT and RELEASE	7 CFR 330.106

Table 3-51 Proteaceae (protea) (page 2 of 2)

If the articles were cut in:	And the shipment:	And the shipment:	Then:	Authority:
New Zealand	Arrived directly from New Zealand	Is accompanied by a phytosanitary certificate with **one** of the following additional declarations: ◆"The flowers were grown in greenhouses or screen houses inspected and found free of light brown apple moth (LBAM) (*Epiphyas postvittana*) and the consignment was inspected and found free of LBAM." **OR** ◆"The cut flowers/greenery in this shipment were produced under the MPI BNZ Exports Phytosanitary Compliance Program for LBAM for the export of cut flowers and foliage to the U.S."	INSPECT and RELEASE	
		Lacks the above certification	PROHIBIT ENTRY	Emergency measures went into effect 08/04/08
	Arrived from a country **other than** New Zealand	Is accompanied by a phytosanitary certificate issued by the transiting country's NAPPO officials, with the additional declaration: "The cut flowers/garlands/wreaths/greenery in this shipment have been inspected and found free of all life stages of light brown apple moth (*Epiphyas postvittana*)."	INSPECT and RELEASE	
		Lacks the above certification	PROHIBIT ENTRY	Emergency measures went into effect 08/04/08
South Africa	→	Is accompanied by a foreign phytosanitary certificate	INSPECT and RELEASE	7 CFR 319.74
		Lacks a foreign phytosanitary certificate	PROHIBIT ENTRY	Emergency measures went into effect 08/04/08
Swaziland	→	→	PROHIBIT ENTRY	7 CFR 330.106
Country **other than** listed above	→	→	INSPECT and RELEASE	7 CFR 319.74

Prunus spp. (almond, apricot, cherry, cherry laurel, English laurel, nectarine, peach, plum, prune), Rosaceae

Prunus spp. are PROHIBITED from all countries because they are hosts to a diversity of exotic diseases and pests. Use Table 3-41 to regulate fresh cut articles of *Prunus* spp.

Table 3-52 *Prunus* spp., Rosaceae

If the articles are grown in:	And the articles are:	Then:	Authority:
All countries	Branches with or without foliage or blooms	PROHIBIT ENTRY	7 CFR 319.37

Pseudostuga spp. (Douglas fir), Pinaceae

See Coniferae on page 3-14.

Pyracantha spp. (firethorn), Rosaceae

Pyracantha spp. are regulated because they are hosts of *Anoplophora chinensis*, citrus longhorned beetle (CLB) and *Anoplophora glabripennis*, Asian longhorned beetle (ALB), both destructive, wood-boring pests. Use Table 3-53 to regulate fresh cut articles of *Pyracantha* spp.

Table 3-53 *Pyracantha* spp. (firethorn), Rosacea

If the articles are grown in:	And the articles are:	Then:	Authority:
Afghanistan, China, Croatia, Democratic People's Republic of Korea, European Union[1], Indonesia, Japan, Madagascar, Malaysia, Myanmar, Philippines, Republic of Korea, Switzerland, Taiwan, or Vietnam	Branches or stems **greater than** 10mm in diameter	PROHIBIT ENTRY	7 CFR 319.37 and Federal Order DA-2013-18 effective May 20, 2013
	Branches or stems 10mm in diameter **or less**	INSPECT and RELEASE	
A country **other than** listed above	Branches or stems, including leaves, cut flowers, or fruits[2] attached		7 CFR 319.37

1 Member States include Austria, Belgium, Bulgaria, Cyprus, Czech Republic, Denmark, Estonia, Finland, France, Germany, Greece, Hungary, Ireland, Italy, Latvia, Lithuania, Luxembourg, Malta, Netherlands, Poland, Portugal, Romania, Slovakia, Slovenia, Spain, Sweden, United Kingdom.

2 *Pyracantha* spp. is **not** a known host for fruit flies. For cut flowers with fruits, the authority is 7 CFR 319.56; for cut flowers free of fruits, the authority is 7 CFR 319.74.

Pyrus spp. (pear), Rosaceae

Pyrus spp. are PROHIBITED from all countries because they are host to a diversity of exotic diseases and pests. Use Table 3-54 to regulate fresh cut articles of *Pyrus* spp.

Table 3-54 *Pyrus* spp. (pear) Rosaceae

If the articles are grown in:	And the articles are:	Then:	Authority:
All countries	Branches with or without foliage or blooms	PROHIBIT ENTRY	7 CFR 319.37

Ricinus communis (castor, ricin), Euphorbiaceae

Use Table 3-55 on page 3-50 to regulate botanical fruits (pods) with stems and leaves of *Ricinus communis*. Fruits of *Ricinus* are regulated to prevent the entry of exotic fruit flies including the guava fruit fly (*Bactrocera correcta*).

Table 3-55 *Ricinus communis* (castor, ricin) Euphorbiaceae

If the stems are:	And grown in:	And the shipment:	Then:	Authority:
With fruit pods	Canada	→	INSPECT and RELEASE	7 CFR 319.56
	Chile or New Zealand	→	1. REQUIRE an import permit 2. INSPECT and RELEASE	
	Netherlands	Is accompanied by a foreign phytosanitary certificate[1] showing the name and address of the grower in the Netherlands[2]	1. REQUIRE an import permit[3] 2. INSPECT and RELEASE	
		Lacks a foreign phytosanitary certificate or the grower is **not** clearly indicated as in the Netherlands	PROHIBIT ENTRY	
	Country **other than** listed above	→		
Without fruit pods	→		INSPECT and RELEASE	7 CFR 319.74

1 A foreign phytosanitary certificate is required to ensure that *Ricinus* spp. are grown in a country free from fruit flies.

2 The name of the grower's village satisfies the address requirement.

3 If the importer **lacks** an import permit and the shipment is noncommercial and can be 100% inspected, the permit requirement may be waived. Otherwise, HOLD the shipment and direct the importer to apply for a permit (*see* Appendix A, Permits and Foreign Phytosanitary Certificates on page A-1 for instructions and information about permits).

Ruscus (box-holly, butcher's broom, horse-tongue, spineless butcher's-broom), Ruscaceae (also placed in Liliaceae)

INSPECT and RELEASE stems, leaves, or inflorescences, including cut flowers with fruits attached, of *Ruscus* spp. *Ruscus* is **not** a known host for fruit flies. For cut flowers with fruits, the authority is 7 CFR 319.56; for cut flowers free from fruits, the authority is 7 CFR 319.74.

Rutaceae (citrus)

Rutaceae includes all genera and species of the citrus subfamilies Aurantioideae, Rutoideae, and Toddalioideae. For a list of all genera and species of citrus, refer to GRIN Genera of Rutaceae.

Rutaceae are regulated from all countries to prevent citrus canker and other citrus diseases from entering. Use Table 3-56 to regulate fresh, cut articles of Rutaceae.

Table 3-56 Rutaceae (all genera and species of the citrus subfamilies Aurantioideae, Rutoideae, and Toddalioideae)

If destined to:	Then:	Authority:
◆Guam ◆The Commonwealth of the Northern Mariana Islands (CNMI)	INSPECT and RELEASE	7 CFR 319.19
Territory or State **other than** Guam or CNMI	PROHIBIT ENTRY	

Saccharum spp. (sugarcane), Poaceae

Saccharum spp. are regulated to prevent the introduction of certain injurious insects and fungi that attack sugarcane. Therefore, PROHIBIT ENTRY to fresh, cut articles of *Saccharum* spp. The authority is 7 CFR 319.15.

If the articles are dried, go to the *Miscellaneous and Processed Products Import Manual*.

Salix spp. (osier, willow), Salicaceae

Salix spp. are PROHIBITED from Europe to prevent the introduction of *Erwinia salicis*, watermark disease. In addition, *Salix* spp. are regulated because they are hosts of *Anoplophora chinensis*, citrus longhorned beetle (CLB) and *Anoplophora glabripennis*, Asian longhorned beetle (ALB), both destructive, wood-boring pests. Use Table 3-57 to regulate fresh, cut articles of *Salix* spp.

Table 3-57 *Salix* spp. (osier, willow), Salicaceae

If the articles are grown in:	And the articles are:	Then:	Authority:
Europe[1]	Branches of any size	PROHIBIT ENTRY	7 CFR 319.37 and Federal Order DA-2013-18 effective May 20, 2013
Afghanistan, China, Croatia, Democratic People's Republic of Korea, Indonesia, Japan, Madagascar, Malaysia, Myanmar, Philippines, Republic of Korea, Switzerland, Taiwan, or Vietnam	Branches or stems **greater than** 10mm in diameter		
	Branches or stems 10mm in diameter **or less**	INSPECT and RELEASE	
A country **other than** listed above	Branches or stems, including leaves and flowers attached		7 CFR 319.37

1 The recognized countries of Europe, ***not*** dependencies and/or territories are as follows: Albania; Andorra; Armenia; Austria; Azerbaijan; Belarus; Belgium; Bosnia and Herzegovina; Bulgaria; Croatia; Cyprus; Czech Republic; Denmark; Estonia; Finland; France; Georgia; Germany; Greece; Hungary; Iceland; Ireland; Italy; Kazakhstan; Kosovo; Latvia; Liechtenstein; Lithuania; Luxembourg; Macedonia; Malta; Moldova; Monaco; Montenegro; Netherlands; Norway; Poland; Portugal; Romania; Russia; San Marino; Serbia; Slovakia; Slovenia; Spain; Sweden; Switzerland; Turkey; Ukraine; United Kingdom; Vatican City.

Sarracenia spp., Sarraceniaceae

Sarracenia spp. plants are regulated because unrestricted trade could threaten them with extinction. Use Table 3-58 to regulate fresh, cut pitchers (modified leaves) of *Sarracenia* spp.

Table 3-58 *Sarracenia*[1] spp. (pitcher plant) Sarraceniaceae

If the cut articles are:	And the species is:	Then:	Authority:
Entering at a CITES designated port	*Oreophila* (green pitcher plant) or *rubra*	1. REGULATE as CITES Appendix I and ESA-E 2. REQUIRE a CITES import permit from U.S. Fish and Wildlife Service (FWS), a valid CITES export permit from country of export, and a Protected Plant Permit from USDA–APHIS	50 CFR 17 50 CFR 23
	Other than *oreophila* or *rubra*	1. REGULATE as CITES Appendix II 2. REQUIRE a valid CITES export permit from the country of export and a Protected Plant Permit from USDA–APHIS	
Not entering at a CITES designated port	Accompanied by CITES documents	1. SAEGUARD under plant quarantines and plant pest regulations 2. GIVE the importer one of the following options: A. Reexport the articles to the country of origin B. Reroute the articles to a CITES designated port **NOTE**: Shipping and handling charges are the responsibility of the importer	7 CFR 355 50 CFR 23
	Not accompanied by CITES documents	1. HOLD shipment 2. INITIATE seizure and forfeiture actions	

1 Pitchers are regulated. Cut flowers of artificially propagated *Sarracenia* spp. listed in CITES Appendix II are exempt from CITES regulations.

Sorghum bicolor (broomcorn), Poaceae

Use Table 3-59 to regulate fresh, cut articles of *Sorghum bicolor*.

If the broomcorn is dried, see the *Miscellaneous and Processed Products Import Manual*.

Table 3-59 *Sorghum bicolor* (broomcorn) Poaceae

If the articles were grown in:	And destined to:	And the shipment:	Then:	Authority:
The Canadian provinces of Alberta, Manitoba, New Brunswick, Newfoundland, Nova Scotia, Ontario, Prince Edward Island, Quebec, or Saskatchewan	Arizona; California; Colorado; Idaho; Nebraska; Nevada; Oregon; Texas; Utah; Washington	Is accompanied by a Canadian certificate stating the articles were fumigated to eliminate European corn borer	INSPECT and RELEASE	7 CFR 330.105
		Lacks the certification described above	PROHIBIT ENTRY	7 CFR 319.41
	State **other than** listed above	→	RELEASE	7 CFR 330.105
British Columbia	→	→	RELEASE	
A country **other than** Canada	→	→	PROHIBIT ENTRY	7 CFR 319.24 7 CFR 319.41

Striga spp. (witchweed), Scrophulariaceae

Striga spp. are regulated from all countries because they are both parasitic and noxious weeds. Therefore, PROHIBIT ENTRY to fresh, cut articles of *Striga* spp. The authority is 7 CFR 360 and 7 CFR 330.

Symphoricarpos (coralberry, snowberry), Caprifoliaceae

INSPECT and RELEASE stems, leaves, or inflorescences, including cut flowers with fruits attached, of *Symphoricarpos* spp. *Symphoricarpos* is **not** a known host for fruit flies. For cut flowers with fruits, the authority is 7 CFR 319.56; for cut flowers free from fruits, the authority is 7 CFR 319.74.

Triticum spp. (wheat and intergeneric crosses), Poaceae

Triticum spp. are regulated from some countries to prevent Karnal bunt (*Tilletia indica)* and other diseases from entering. Use Table 3-60 to regulate fresh, cut articles of *Triticum* spp. and its intergeneric crosses.

Table 3-60 *Triticum* spp. (wheat and intergeneric crosses) Poaceae

If the cut articles were grown in:	Then:	Authority:
Canada	INSPECT and RELEASE	7 CFR 330.105
A country **other than** Canada	PROHIBIT ENTRY	7 CFR 319.37, 7 CFR 319.59

Tritonia spp. (blazing star), Iridaceae

Per DA-2015-20, APHIS no longer regulates gladiolus rust, *Uromyces transversalis*. APHIS will continue to regulate other rust pathogens that are **not** known to occur in the United States.

Ulmus spp. (Elm), Ulmaceae

Ulmus spp. are PROHIBITED from Europe to prevent the introduction of Elm Mottle Virus. In addition, *Ulmus* spp. are regulated because they are hosts of *Anoplophora chinensis*, citrus longhorned beetle (CLB) and *Anoplophora glabripennis*, Asian longhorned beetle (ALB), both destructive, wood-boring pests. Use *Table 3-61* to regulate fresh, cut articles of *Ulmus* spp.

Table 3-61 *Ulmus* spp. (elm), Ulmaceae

If the articles are grown in:	And the articles are:	Then:	Authority:
Europe[1]	Any plant part including seeds	PROHIBIT ENTRY	7 CFR 319.37 and Federal Order DA-2013-18 effective May 20, 2013
Afghanistan, China, Croatia, Democratic People's Republic of Korea, Indonesia, Japan, Madagascar, Malaysia, Myanmar, Philippines, Republic of Korea, Taiwan, or Vietnam	Branches or stems **greater than** 10mm in diameter		
	Branches or stems 10mm in diameter **or less**	INSPECT and RELEASE	
A country **other than** listed above	Branches or stems, including leaves and flowers attached		7 CFR 319.37

1 The recognized countries of Europe, ***not*** dependencies and/or territories are as follows: Albania; Andorra; Armenia; Austria; Azerbaijan; Belarus; Belgium; Bosnia and Herzegovina; Bulgaria; Croatia; Cyprus; Czech Republic; Denmark; Estonia; Finland; France; Georgia; Germany; Greece; Hungary; Iceland; Ireland; Italy; Kazakhstan; Kosovo; Latvia; Liechtenstein; Lithuania; Luxembourg; Macedonia; Malta; Moldova; Monaco; Montenegro; Netherlands; Norway; Poland; Portugal; Romania; Russia; San Marino; Serbia; Slovakia; Slovenia; Spain; Sweden; Switzerland; Turkey; Ukraine; United Kingdom; Vatican City.

Viburnum spp. (Guelder-rose, Japanese snowball, laurustine, snowball, summer snowflake), Adoxaceae

Viburnum spp. are regulated to prevent fruit flies (if berries are present) and other exotic pests and pathogens from entering, including light brown apple moth (LBAM) (*Epiphyas postvittana*). They are also regulated because they are hosts of *Anoplophora chinensis*, citrus longhorned beetle (CLB) and *Anoplophora glabripennis*, Asian longhorned beetle (ALB), both destructive, wood-boring pests. Use Table 3-62 to regulate fresh cut articles of *Viburnum* spp.

Table 3-62 *Viburnum* spp. (Guelder-rose, Japanese snowball, laurustine, snowball, summer snowflake) Caprifoliaceae

If the articles were cut in:	Then:
Canada	INSPECT and RELEASE
Afghanistan, Austria, Belgium, Bulgaria, China, Croatia, Cyprus, Czech Republic, Democratic People's Republic of Korea, Denmark, Estonia, Finland, France, Germany, Greece, Hungary, Indonesia, Italy, Japan, Latvia, Lithuania, Luxembourg, Madagascar, Malta, Malaysia, Myanmar, Philippines, Poland, Portugal, Republic of Korea, Romania, Slovakia, Slovenia, Spain, Sweden, Switzerland, Taiwan, or Vietnam	GO to Table 3-63 on page 3-56
Australia or New Caledonia	GO to Table 3-64 on page 3-57
Ireland or United Kingdom	GO to Table 3-65 on page 3-57
Netherlands	GO to Table 3-66 on page 3-58
New Zealand	GO to Table 3-67 on page 3-59
A country ***other than*** those listed above	GO to Table 3-68 on page 3-59

Table 3-63 *Viburnum* spp. from Afghanistan, Austria, Belgium, Bulgaria, China, Croatia, Cyprus, Czech Republic, Democratic People's Republic of Korea, Denmark, Estonia, Finland, France, Germany, Greece, Hungary, Indonesia, Italy, Japan, Latvia, Lithuania, Luxembourg, Malta, Poland, Portugal, Republic of Korea, Madagascar, Malaysia, Myanmar, Philippines, Romania, Slovakia, Slovenia, Spain, Sweden, Switzerland, Taiwan, or Vietnam

If:	And:	Then:	Authority:
Branches or stems are **greater than** 10 mm in diameter	→	PROHIBIT ENTRY	7 CFR 319.37 and Federal Order DA-2013-18 effective May 20, 2013
Branches or stems are 10 mm in diameter **or less**	Branches have berries	PROHIBIT ENTRY	7 CFR 319.56
	Branches have **no** berries (**only** flowers or flowers with foliage)	INSPECT and RELEASE	7 CFR 319.74

Table 3-64 *Viburnum* spp. from Australia or New Caledonia

If:	And:	Then:	Authority:
Branches have berries	→	PROHIBIT ENTRY	7 CFR 319.56
Branches have **no** berries (**only** flowers or flowers with foliage)	Accompanied by a foreign phytosanitary certificate with the additional declaration (AD): "The cut flowers/garlands/wreaths/greenery in this shipment have been inspected and found free of all life stages of light brown apple moth (LBAM) (*Epiphyas postvittana).*"	INSPECT and RELEASE	7 CFR 319.74
	Lacks the above certification	PROHIBIT ENTRY	Emergency measures effective August 4, 2008 (LBAM)

Table 3-65 *Viburnum* spp. from Ireland or United Kingdom

If:	And:	And:	And:	Then:	Authority:
Branches or stems are **greater than** 10 mm in diameter	→			PROHIBIT ENTRY	7 CFR 319.37 and Federal Order DA-2013-18 effective May 20, 2013
Branches or stems are 10 mm in diameter **or less**	Arrived directly from Ireland or United Kingdom[1]	→	Accompanied by a foreign phytosanitary certificate with the AD "The cut flowers/garlands/wreaths/greenery in this shipment have been inspected and found free of all life stages of light brown apple moth (LBAM) (*Epiphyas postvittana*)."	INSPECT and RELEASE	7 CFR 319.74
			Lacks the above certification	PROHIBIT ENTRY	Emergency measures effective August 4, 2008
	Arrived from a country of the European Union (EU) **other than** Ireland or United Kingdom	Branches have berries	→	PROHIBIT ENTRY	7 CFR 319.56
		Branches have **no** berries (**only** flowers or flowers with foliage)	Accompanied by a European Union phytosanitary certificate stating, "The [type of flower] in this shipment has been inspected and found free of all life stages of light brown apple moth (LBAM) (*Epiphyas postvittana*)."	INSPECT and RELEASE	7 CFR 319.74
			Lacks the above certification	PROHIBIT ENTRY	Emergency measures effective August 4, 2008

1 Ireland and the United Kingdom are free from Mediterranean fruit fly (*Ceratitis capitata*).

Table 3-66 *Viburnum* spp. from the Netherlands

If:	And:	And:	And:	Then:	Authority:
Branches or stems are **greater than** 10 mm in diameter	→	→	→	PROHIBIT ENTRY	7 CFR 319.37 and Federal Order DA-2013-18 effective May 20, 2013
Branches or stems are 10 mm in diameter **or less**	Branches have berries	Paperwork lists a Dutch grower	Accompanied by an import permit	INSPECT and RELEASE	7 CFR 319.56
			Lacks the import permit	PROHIBIT ENTRY	
		Paperwork **does not** list a Dutch grower	→		
	Branches have **no** berries (**only** flowers or flowers with foliage)	Upon inspection, **no** pests and **no** pathogens are found	→	RELEASE	7 CFR 319.74
		Upon inspection, **only** disease symptoms are found	Symptoms are on the stems	1. SUBMIT the disease as a PROMPT interception 2. RELEASE	7 CFR 330.105
			Symptoms are on **other than** the stems	1. SUBMIT the disease as an URGENT interception 2. HOLD the shipment pending final determination	
		Upon inspection, insects or other arthropods or insects in combination with disease symptoms are found	→	1. SUBMIT the pest as an URGENT interception 2. HOLD the shipment pending final determination	

Table 3-67 *Viburnum* spp. from New Zealand

If:	And:	And:	Then:	Authority:
Arrived directly from New Zealand[1]	→	Accompanied by a phytosanitary certificate with **one** of the following ADs: ◆"The flowers were grown in greenhouses or screenhouses inspected and found free of light brown apple moth (LBAM) (*Epiphyas postvittana*) and the consignment was inspected and found free of LBAM." **OR** ◆"The cut flowers/greenery in this shipment were produced under the MPI BNZ Exports Phytosanitary Compliance Program for LBAM for the export of cut flowers and foliage to the U.S."	INSPECT and RELEASE	7 CFR 319.74
		Lacks the above certification	PROHIBIT ENTRY	Emergency measures effective August 4, 2008
Arrived from a country **other than** New Zealand	Branches have berries	→	PROHIBIT ENTRY	7 CFR 319.56
	Branches have **no** berries (**only** flowers or flowers with foliage)	Accompanied by a phytosanitary certificate issued by the transiting country's NAPPO officials with the AD: "The cut flowers/garlands/wreaths/greenery in this shipment have been inspected and found free of all life stages of light brown apple moth (LBAM) (*Epiphyas postvittana*)."	INSPECT and RELEASE	7 CFR 319.74
		Lacks the above certification	PROHIBIT ENTRY	Emergency measures effective August 4, 2008

1 New Zealand is free from Mediterranean fruit fly (*Ceratitis capitata*).

Table 3-68 *Viburnum* spp. from Countries Other Than Those Listed Above

If:	Then:	Authority:
Branches have berries	PROHIBIT ENTRY	7 CFR 319.56
Branches have **no** berries (**only** flowers or flowers with foliage)	INSPECT and RELEASE	7 CFR 319.74

Watsonia spp. (bugle lily, Merians bugle lily, pink watsonia, watsonia), Iridaceae

Per DA-2015-20, APHIS no longer regulates gladiolus rust, *Uromyces transversalis*. APHIS will continue to regulate other rust pathogens that are **not** known to occur in the United States.

Zamiaceae/Cycadaceae (cycads)

See *Cycadaceae/Zamiaceae (cycads)* on page 3-26.

Zea mays (corn and closely related plants), Poaceae

Zea mays is regulated because of the European corn borer, *Ostrinia nubilalis*, and other insects and plant diseases. Use Table 3-69 on page 3-60 to regulate fresh, cut articles of *Zea mays*.

If the cut articles are dried, see the *Miscellaneous and Processed Products Import Manual*.

Table 3-69 *Zea mays* (corn and closely related plants) Poaceae

If the articles were grown in:	And destined to:	And the shipment:	Then:	Authority:
The Canadian Provinces of Alberta; Manitoba; New Brunswick; Newfoundland; Nova Scotia; Ontario; Prince Edward Island; Quebec; Saskatchewan	Arizona; California; Idaho; Nevada; New Mexico; Oregon; Texas; Utah; Washington	Is accompanied by a Canadian certificate stating the articles were fumigated to eliminate European corn borer	RELEASE	7 CFR 330.105
		Lacks the certification described above	PROHIBIT ENTRY	7 CFR 319.41
	State **other than** listed above	→	INSPECT and RELEASE	7 CFR 330.105
British Columbia	→	→		
A country **other than** Canada	→	→	PROHIBIT ENTRY	7 CFR 319.24 7 CFR 319.41

Appendix

A

Appendix A

Permits and Foreign Phytosanitary Certificates

Contents

Introduction **A-1**
PPQ Permits **A-1**
- Oral Permission **A-2**
- Written Permits **A-2**
- Controlled Import Permits **A-7**
- Transit Permits **A-9**

Veterinary Services Permits **A-10**
CITES Permits **A-11**
Phytosanitary Certificates **A-12**

Introduction

This appendix provides administrative and operational policies regarding permits and foreign phytosanitary certificates encountered when regulating agricultural products imported for other than planting purposes.

This appendix **does not** cover the following topics:

- Permits and foreign phytosanitary certificates for plants and plant products imported for planting purposes (*see Plants for Planting Manual*)
- Animal product certificates (*see* the *Animal Product Manual*)

The three kinds of agricultural quarantine inspection permits are as follows:

1. PPQ Permits
2. VS Permits
3. CITES Permits

PPQ Permits

PPQ permits are either oral or written permission to import plant material. PPQ permits are issued by USDA–APHIS–PPQ and are authorized by the Plant Protection Act (PPA).

The purposes of PPQ permits are as follows:

- Inform importers of agricultural regulations and conditions of entry that must be met, such as treatments or designated ports of entry (POEs)
- Inform PPQ and CBP of the importers' intentions

- Provide contact with importers in order to exchange information
- Strengthen the ability to exclude prohibited material and thereby keep out plant pests
- Verify that importers had prior knowledge of agricultural regulations

Oral Permission

PPQ or CBP regulatory officials provide oral permission at the time of inspection. The regulatory official's oral permission is appropriate for noncommercial importations of admissible plant material. Noncommercial means for personal use, **not** for resale or other commercial use, and admissible material are items that are generally unrestricted. If a plant product is admissible, in the ***Reference*** chapter of this manual, the regulatory action listed is to INSPECT and RELEASE. Therefore, when all import requirements are met based on a regulatory inspection, oral permission is adequate for noncommercial importations of admissible plant material.

Written Permits

USDA–APHIS–PPQ–Imports, Regulations, and Manuals (IRM) issues written permits for commercial importations of admissible plant material and for the movement of live plants pests, pathogens, and Federal noxious weeds (FNW). The written permits covered in this appendix are as follows:

- PPQ Form 526 on page A-3 (Application for Permit to Move Live Plant Pests or Noxious Weeds)
- PPQ Form 597 on page A-5 (Import Permit for Plant and Plant Products)

Although in general, commercial shipments of cut flowers **do not** require a written permit[1], permits are important. Written permits instruct the importer to purchase and to handle agricultural plant material in a manner that minimizes pest risk. Additionally, written permits allow PPQ to fully enforce the regulations with fewer complications because written permits verify that importers are aware of the conditions of entry.

Written permits **do not** automatically authorize entry. PPQ and CBP regulatory officials **must** validate the accuracy of permits—matching them with the shipments and importers to confirm the conditions of entry are met. Most importations accompanied by a written permit are referred to secondary to be cleared by a CBP Agricultural Specialist. Live plants, covered by both import permits and phytosanitary certificates, are referred to the nearest PPQ plant inspection station for inspection and processing.

1 Cut flowers covered under quarantines **other than** 7 CFR 319.74 may require a written permit. Examples include articles with decorative fruits (regulated by 7 CFR 319.56) and *Triticum* spp. (regulated by 7 CFR 319.59).

Importers apply for Protected Plant Permit by completing *PPQ Form 621, Application for Protected Plant Permit to Engage in the Business of Importing, Exporting, or Reexporting Terrestrial Plants.* Importers may call USDA–APHIS–PPQ–Permit Services, toll free, at 1-877-770-5990 or go to the Permit Services Web site and follow the links for CITES and ESA.

PPQ Form 526

PPQ Form 526, Application for Permit to Move Live Plant Pests or Noxious Weeds, is the application as well as the permit authorizing movement of live plant pests, Federal noxious weeds, or parasitic plants imported for scientific and educational research. USDA–APHIS–PPQ–Permit Services completes and validates these permits for Federal noxious weeds (FNWs) and parasitic plants under the Plant Protection Act (PPA), bees and bee-related articles (i.e., pollen and honey utilized as bee feed) under the authority of 7 CFR 319.76, butterflies, moths, and earthworms under the authority of 7 CFR 330.

Section C of PPQ Form 526 becomes the permission to move the live plant pests, pathogens, or FNWs described. Section C of PPQ Form 526 will list or attach the conditions that **must** be met to mitigate the pest risk. Also, standard safeguards are printed on the reverse side of the permit. To be valid, permits **must** be signed by an authorized official of USDA–APHIS–PPQ (either in Block 24 of Section C or at the end of the attached sheets describing the permit conditions).

Since November 1, 2003, importers can **no** longer hand-carry materials authorized on a PPQ Form 526. All importations of such materials **must** enter the United States by bonded carrier. If organisms authorized by a PPQ Form 526 are found on an individual or in baggage, seize the package and authorize its movement to the nearest PPQ plant inspection station for destruction, unless **explicitly** authorized to hand carry by a permit issued after August 1, 2003.

Along with the PPQ Form 526, USDA–APHIS–PPQ–Permit Services generally issues a supply of red and white labels, PPQ Form 599, for the importer to affix to packages of live plant pests and pathogens (*see* ***Table A-1*** on page ***A-4*** for instructions about how to process red-and white-labeled packages).

Table A-1 How to Process Red-and White-Labeled Packages (PPQ Form 599)

If you find a package with an affixed red-and-white label in:	Then REFER the package to:
Cargo under bonded carrier	***NOTICE*** **Do not** open the package! CBP Agriculture Specialist, who will: 1. CONFIRM the conditions of the permit have been met 2. INSPECT the package without opening to ensure it is **not** damaged or leaking 3. RELABEL and SEND the package directly to the nearest PPQ plant inspection station
Passenger baggage hand carried by the importer	***NOTICE*** **Do not** open the package! Secondary where a CBP Agriculture Specialist will: 1. SEIZE the package 2. SEND the package to the nearest PPQ plant inspection station for destruction, unless the permit (issued after August 1, 2003) **explicitly** authorizes the importer to hand carry the plant pests or noxious weeds ***NOTICE*** All live plant pests, pathogens, and noxious weeds imported under written permit **must** enter the United States by bonded carrier.

Importers apply for a permit to move live plant pests, pathogens, or FNWs by completing Section A of PPQ Form 526, Application for Permit to Move Live Plants Pests or Noxious Weeds. Importers may go to the Permits Services Web site or call, toll free, at 1-877-770-5990.

PPQ Form 597

PPQ Form 597, Import Permit for Plant and Plant Products, is a written permit issued by USDA–APHIS–PPQ –Permit Services to authorize the importation of regulated plants and plant products for a specified period. General guidelines for handling written permits are described in this appendix. Following the general guidelines are those for handling the following special categories of written permit:

- Controlled Import Permits on page A-7
- Transit Permits on page A-9

PPQ Form 597 is issued and numbered using the specific subpart of the Code of Federal Regulations (CFR) in Block 4, under which the plants or plant products are regulated. Similarly, if a plant product requires a written permit as a condition of entry, that plant product is listed in the ***Reference*** chapter of this manual as requiring an import permit along with the regulatory authority (see examples below).

EXAMPLE

1. Foreign cotton and covers are regulated by subpart 8 of 7 CFR 319. The regulatory authority in Block 4 is 7 CFR 319.8 and the permit number in Block 1 is 8 followed by a number representing an issuance scheme.

2. Sugarcane products and by-products such as sugarcane juice (including parts of the sugarcane plant) are regulated by subpart 15 of 7 CFR 319. The regulatory authority in Block 4 is 7 CFR 319.15 and the permit number in Block 1 is 15 followed by a number representing an issuance scheme.

3. Logs, lumber, and other unmanufactured wood products are regulated by subpart 40 of 7 CFR 319. The regulatory authority in Block 4 is 7 CFR 319.40 and the permit number in Block 1 is 40 followed by a number representing an issuance scheme.

4. Corn or maize, broomcorn, and related plants of corn are regulated by subpart 41 of 7 CFR 319. The regulatory authority in Block 4 is 7 CFR 319.41 and the permit number in Block 1 is 41 followed by a number representing an issuance scheme.

5. Rice and rice-related articles such as tatami mats made from rice straw are regulated by subpart 55 of 7 CFR 319. The regulatory authority in Block 4 is 7 CFR 319.55 and the permit number in Block 1 is 55 followed by a number representing an issuance scheme.

6. Approved fresh fruits and vegetables (including fresh herbs and sprouts) are regulated by subpart 56 of 7 CFR 319. The regulatory authority in Block 4 is 7 CFR 319.56 and the permit number in Block 1 is 56 followed by a number representing an issuance scheme.

For many generally admissible plant material (inspect and release), a PPQ or CBP regulatory official may issue a **one-time only** written permit at the time of inspection. The situations in which an importer plans **no more than one** commercial importation of plant material that **does not** require postentry growing are rare.

If an importer presents an expired permit (refer to Block 2), the PPQ or CBP regulatory official may allow the importer to complete an application for a new permit using PPQ Form 587, Application for Permit to Import Plants or Plant Products. Once the permit application is approved, the importation can be cleared provided all entry conditions and requirements are met. Because this is a time-consuming effort, importations awaiting approval are usually referred to secondary and then authorized to move to the nearest PPQ plant inspection station for processing.

If the importer **lacks** an import permit when one is required and the shipment is noncommercial and can be 100% inspected, the import permit requirement may be waived. Otherwise, HOLD the shipment and direct the importer to apply for a permit by completing PPQ Form 587, Application for Permit to Import Plants or Plant Products. For wood products, the importer completes PPQ Form 585, Application for Permit to Import Timber or Timber Products. For soil, the importer completes PPQ Form 525A, Application for Permit to Receive Soil. Importers may go to the Permits Services Web site or call, toll free, at 1-877-770-5990.

Processing Written (Import) Permits

If an importation of plant products requiring a written permit is encountered in cargo, REFER the importation to a CBP Agriculture Specialist. If an importation of plant products requiring written permit is encountered in passenger baggage, REFER the importation to secondary.

The CBP Agriculture Specialist will do the following:

1. CONFIRM the permit is valid (not expired) and appropriate for the plant products being imported.
2. HOLD the shipment and direct the importer to apply for a permit if the permit is expired or inappropriate[2].
3. CONFIRM the conditions of the permit have been met.
4. If the conditions and requirements have been met, RELEASE or CONTROL as specified on the permit.

2 Importers may call USDA–APHIS–PPQ–Permit Services, toll free, at 1-877-770-5990 or go to the Permits Services Web site.

Along with the PPQ Form 597, USDA–APHIS–PPQ–Permit Services sometimes issues a supply of green and yellow labels, PPQ Form 505, for the importer to affix to packages of quarantine plant material that constitute a higher risk (*see* ***Table A-2*** for instructions about how to process green and yellow labeled packages).

Table A-2 How to Process Green- and Yellow-Labeled (PPQ Form 505) Packages

If you find a package with an affixed green-and-yellow label in:	Then REFER the package to:
Cargo	***NOTICE*** **Do not** open the package! CBP Agriculture Specialist, who will: 1. CONFIRM the conditions of the permit have been met 2. INSPECT the package without opening to ensure it is **not** damaged or leaking 3. RELABEL and SEND the package directly to the nearest PPQ plant inspection station
Passenger baggage	***NOTICE*** **Do not** open the package! Secondary where a CBP Agriculture Specialist will: 1. CONFIRM the conditions of the permit have been met 2. INSPECT the package without opening to ensure it is **not** damaged or leaking 3. RELABEL and SEND the package directly to the nearest PPQ plant inspection station

Controlled Import Permits[3]

USDA–APHIS–PPQ–Permit Services issue Controlled Import Permits, a special category of written permit for the importation of small research samples of prohibited plants or plant products intended for experimental purposes. Controlled Import Permits supersede the requirements in the import manuals and direct the regulatory official on how to proceed when clearing the importation at POEs.

NOTICE

The pest risk involved with importing prohibited plants and plant products under Controlled Import Permit is relatively great because these plants or plant products are attacked by serious plant pests and diseases in the country of origin. Therefore, Controlled Import Permits will **always** list specific safeguards or conditions tailored for the intended importation, which the importer **must** meet as a condition of entry.

Unlike other written permits, Controlled Import Permits are issued **only** by USDA–APHIS–PPQ–Permit Services.

3 A valid Departmental Permit is an acceptable form of Controlled Import Permit.

NOTICE

PPQ or CBP regulatory officials at POEs are **never** authorized to issue permits for prohibited plants and plant products.

Importers apply for Controlled Import Permits[4] by completing PPQ Form 588, Application for Permit to Import Prohibited Plants or Plant Products for Experimental Purposes. Importers may visit the Permits Services Web site or call, toll free, at 1-877-770-5990.

Controlled Import Permits are issued using PPQ Form 597, Import Permit for Plants and Plant Products. Written in Block 1 will be "CONTROLLED IMPORT PERMIT" followed by a series of numbers.

Processing Controlled Import Permits

1. Obtain a copy of the Controlled Import Permit (*see* ***Table A-3***).

Table A-3 Obtain a Copy of the Controlled Import Permit (PPQ Form 597)

If the:	And the plants or plant products are:	Then:
Importer or the POE office (local files or national databases) has a copy of the permit	→	CONTINUE to Step 2 below
Importer applied for a permit, but there is **no** copy at the POE	→	CONTACT USDA-APHIS-PPQ–Permit Services through proper channels
Importer **did not** apply for a permit	Destined to a research facility or educational institution	1. CONTACT USDA–APHIS–PPQ–Permit Services through proper channels 2. If the prohibited material presents an imminent pest hazard, DESTROY or REEXPORT the material
	Not destined to a research facility or an educational institution	DESTROY or REEXPORT the material with the concurrence of the port supervisor or officer-in-charge (OIC)

2. Ensure the imported prohibited plants or plants products are authorized by the Controlled Import Permit.
   A. If there is a discrepancy, HOLD the importation under appropriate safeguards and CONTACT USDA–APHIS–PPQ–Permit Services through proper channels.
   B. If the importer is hand-carrying the prohibited plants or plant products, ensure the permit authorizes hand carrying to the final destination. If authorized, ALLOW the importer to hand carry the prohibited material in accordance with the conditions listed on the permit. If **not** authorized, CONTACT USDA–APHIS–PPQ–Permit Services through proper channels.

4 A valid Departmental Permit is an acceptable form of Controlled Import Permit.

3. If the package must be sent to USDA–APHIS–PPQ–National Plant Germplasm and Biotechnology Laboratory, ensure the package is secure and has sufficient postage. Mail the package to the following address:

   USDA–APHIS–PPQ
   Center for Plant Health Science and Technology
   National Plant Germplasm and Biotechnology Laboratory
   Building 580, BARC-EAST
   Beltsville, Maryland 20705

4. Follow the directions printed on the Controlled Import Permit.[5] Ensure all conditions on the permit are met (*see* ***Table A-4***).

EXAMPLE	Some conditions of entry on Controlled Import Permits are as follows: ◆ Dispose of by autoclaving, incinerating, or grinding ◆ Inspect by a plant specialist named on the permit ◆ Treat by USDA–APHIS–PPQ at POE

Table A-4 Processing Controlled Import Permits

If the shipment:	Then:
Meets the stated conditions of entry	PROCEED as directed by the Controlled Import Permit
Does not meet the stated conditions of entry	1. HOLD the plants or plant products under appropriate safeguards 2. REFRIGERATE the plants or plant products (if necessary) 3. REQUEST instructions from USDA–APHIS–PPQ–Permit Services through proper channels

Transit Permits

USDA–APHIS–PPQ–Permit Services issues transit permits for the unloading, landing, or other movement of plants and plant products in cargo and passenger baggage through the United States to ensure they are adequately safeguarded and reexported in the specified time frame. Transit permits prescribe all required safeguarding or mitigation measures for the shipment based on a risk analysis. Transit permits are issued in accordance with 7 CFR 352.

Only agricultural shipments moving as transportation and exportation (TE) cargo or immediate export (IE) cargo require a transit permit. Most shipments moving under Customs bond as in-transit (IT) cargo and as residue cargo are covered by other authorization mechanisms, **except** for shipments of avocados from Mexico moving IT to inland-approved States that require a transit permit.

Importers apply for transit permits by completing PPQ Form 586, Application for Permit to Transit Plants and/or Plant Products through the United States. Importers may visit the Permits Services Web site or call toll free 1-877-770-5990.

5 A valid Departmental Permit is an acceptable form of Controlled Import Permit.

Veterinary Services Permits

Veterinary Services (VS) permits are written permission to import prohibited or restricted animal products or by-products such as manure, eggs for food and hatching, egg by-products for research or other inedible purposes, dry milk products, blood, organs, organisms, and vectors imported for biological use and research. VS permits are issued by USDA–APHIS–VS to identify conditions of entry (that take precedence over those listed in the *Animal Product Manual*), to inform the importer of the conditions of entry, and to allow regulators to verify that importers had prior knowledge of VS requirements.

VS Form 16-6, United States Veterinary Permit for Importation and Transportation of Controlled Materials and Organisms and Vectors is mainly used for commercial importations of restricted or prohibited animal products and by-products. VS Form 16-6A is mainly used for animal products and by-products imported for research, such as organisms and vectors.

When a VS permit authorizes the entry of an animal product or by-product PPQ or CBP regulatory officials at the POE review the permit to verify the identifying number, expiration date, and destination address. Three asterisks will precede restrictions and precautions that must be confirmed as being met.

Refer to the *Animal Product Manual* for the background, procedures, and regulatory actions to enforce the regulations governing the import and export of animals products and by-products.

CITES Permits

While the Convention on International Trade in Endangered Species (CITES) is a multinational treaty regulated by the U.S. Fish and Wildlife Service (FWS), PPQ and CBP are designated to inspect protected plants and plant products moving in international commerce. The importation, exportation, and reexportation of protected plants and plant products are restricted to designated ports (usually with PPQ plant inspection stations (PISs)) with qualified specialists, such as botanists, to process such shipments.

PPQ Form 622, Protected Plant Permit, is issued by USDA–APHIS–PPQ–Permit Services for all commercial importations, exportations, and reexportations of plants and plant products regulated under the Endangered Species Action (ESA) (50 CFR 17) and CITES (50 CFR 23). USDA regulation 7 CFR 355 requires that importers possess a valid Protected Plant Permit, which is valid for two years. A Protected Plant Permit **does not** authorize entry into the United States, and is rarely seen in passenger baggage, which does not typically involve commercial shipments.

In addition to a Protected Plant Permit, importations of CITES Appendix I and CITES Appendix II plant material **must** be accompanied by an export certificate from the country of origin. Also, importations of CITES Appendix I plant material **must** have an import permit from the U.S. FWS, issued first then sent to the origin country so they can issue the export permit. These shipments of rare, wild-collected specimens are for scientific research purposes **only**; **no** commercial trade is allowed. Exceptions can be made for some artificially propagated specimens of CITES Appendix I specimens or hybrids, allowing them to be traded legally as though they are CITES Appendix II specimens.

Importers apply for Protected Plant Permits by completing *PPQ Form 621, Application for Protected Plant Permit to Engage in the Business of Importing, Exporting, or Reexporting Terrestrial Plants*. Importers may visit the Permits Services Web site or call, toll free, at 1-877-770-5990.

Phytosanitary Certificates

Phytosanitary certificates are documents for specific plants or plant products issued by an official of an exporting country, or country of reexport, attesting to freedom from pests and admissibility into the destination country.

Phytosanitary certificates can be valid and accurate, yet still be insufficient to meet conditions of entry. Therefore, even when plants or plant products are accompanied by a phytosanitary certificate, PPQ and CBP regulatory officials inspect the importations to confirm admissibility.

- In general, PPQ and CBP regulatory officials use phytosanitary certificates to perform the following tasks at the POE:
- Confirm that plants or plant products meet specific certification requirements
- Determine how much of the shipment to inspect
- Determine if quarantine requirements are met (growing season, preclearance)
- Determine if the plants or plant products were treated in country of origin and, if so, identify the treatment
- Identify area where plants or plant products were grown
- Identify type of plants or plant products

Do not confuse foreign-issued phytosanitary certificates with PPQ-issued import permits. A phytosanitary certificate is issued by the foreign plant protection organization and is a statement of fact (certifies the inspection), while an import permit is issued by USDA–APHIS–PPQ as an authorization to import or transit a commodity. If there is an operational preclearance program for the imported plants or plant products in the country of origin, inspection may be waived for precleared shipments bearing a U.S. Department of Agriculture release stamp on the foreign document. Occasionally spot check precleared shipments.

Appendix

B

Appendix B

Articles Requiring Special Consideration

Contents

Prohibited Cut Flowers and Greenery Articles of Canadian Origin **B-1**
List of Species Susceptible to Chrysanthemum White Rust **B-2**

Prohibited Cut Flowers and Greenery Articles of Canadian Origin

- Almond (*Prunus* spp.)
- Apple (*Malus* spp.)
- Apricot (*Prunus* spp.)
- Cherry (*Prunus* spp.)
- Cherry laurel (*Prunus* spp.)
- Cotton (*Gossypium* spp.)
- Crabapple (*Malus* spp.)
- English laurel (*Prunus* spp.)
- Flowering quince (*Chaenomeles* spp.)
- Grape (*Vitis* spp.)
- Nectarine (*Prunus* spp.)
- Peach (*Prunus* spp.)
- Pear (*Pyrus* spp.)
- Prune (*Prunus* spp.)
- Quince (*Cydonia* spp.)

List of Species Susceptible to Chrysanthemum White Rust

Following is a list of species susceptible to Chrysanthemum white rust (CWR):

- *Chrysanthemum arcticum* (=*Arctanthemum arcticum*, *Dendranthema arcticum*)
- *Chrysanthemum boreale* (=*Chrysanthemum indicum* var. *boreale*, *Dendranthema boreale*)
- *Chrysanthemum indicum* (=*Dendranthema indicum*)
- *Chrysanthemum japonense* (=*Dendranthema japonense*, *Dendranthema occidentali japonense*)
- *Chrysanthemum japonicum* (=*Chrysanthemum makinoi*, *Dendranthema japonicum*)
- *Chrysanthemum* x *morifolium* (=*Anthemis grandiflorum*, *Anthemis stipulacea*, *Chrysanthemum sinense*, *Chrysanthemum stipulaceum*, *Dendranthema* x *gloriflorum*, *Dendranthema* x *morifolium*, *Matricaria morifolia*)
- *Chrysanthemum pacificum* (=*Ajania pacifica*, *Dendranthema pacificum*)
- *Chrysanthemum shiwogiku* (=*Ajania shiwogiku*, *Dendranthema shiwogiku*)
- *Chrysanthemum yoshinaganthum* (=*Dendranthema yoshinaganthum*)
- *Chrysanthemum zawadskii ssp*. *yezoense* (=*Chrysanthemum arcticum* subsp. *Maekawanum*, *Chrysanthemum arcticum* var. *yezoense*, *Chrysanthemum yezoense*, *Dendranthema yezoense*, *Leucanthemum yezoense*)
- *Chrysanthemum zawadskii ssp*. *Zawadskii* (=*Chrysanthemum sibiricum*, *Dendranthema zawadskii*, *Dendranthema zawadskii* var. *zawadskii*)
- *Leucanthemella serotina* (=*Chrysanthemum serotinum*, *Chrysanthemum uliginosum*, *Pyrethrum uliginosum*)
- *Nipponanthemum nipponicum* (=*Chrysanthemum nipponicum*, *Leucanthemum nipponicum*)

Cut Flowers and Greenery

Glossary

Introduction

Use this *Glossary* to find the meaning of specialized words, abbreviations, acronyms, and terms used in regulating the fresh, cut articles imported for decoration or ornamentation. To locate where in the manual a given definition, term, or abbreviation is mentioned, use the *Index* on page Index-1.

Definitions, Terms, and Abbreviations

additional declaration (AD). statement that is required by an importing country to be entered on a foreign phytosanitary certificate and that provides specific additional information pertinent to the phytosanitary condition of a shipment.

branch. cut portion of a woody plant, with or without foliage or blooms.

broomcorn. grass (*Sorghum bicolor* var. *technicus*) having flower clusters with stiff, branching stalks that are used to make brooms and brushes.

certificate. authorization to move a regulated item, most often indicated by stamping “Released” or “Treated and Released” on documents or containers.

commercial shipment. goods imported for resale purposes or for profit; **not** for personal use.

contaminants. undesirable impurity, e.g., soil, animal manure, and weed seeds.

culm. jointed stem of a grass or sedge.

cut flower. fresh, cut portion of a plant that is highly perishable, including the inflorescence, and any parts of the plant attached to the cut portion. A cut flower can take different forms, i.e., a single stem with the inflorescence, a lei made of many inflorescences threaded on a string like beads, or a bouquet consisting of a mixture of flowers like carnations, lilies, and roses. This definition **does not** include decorative plant material that has been dried, bleached, dyed, or chemically treated; or filler and greenery.

decorative fruit. fruit intended to be used for ornamental purposes and **not** to be eaten or grown.

disease. interaction between a pathogen and the plant resulting in damage to the plant. The damage caused is referred to as a symptom.

dried. category of processing whereby water is removed or reduced by exposure to heat or air.

endemic. common and/or widespread in a particular place.

filler and greenery. fresh foliage used for decoration, such as fern and palm fronds, asparagus (fern) plumes, pine sprays, chamaedorea fronds, willow branches, *Ruscus*, *Cyperus*, *Euonymus*, and other greens. Compare cut flowers.

foreign phytosanitary certificate. official document issued by an employee of the national plant protection organization of the exporting country attesting to the phytosanitary condition of plants or plant products (*see also* *phytosanitary certificate* on page Glossary-3).

fruit. ripened ovary of a seed-bearing plant; examples commonly encountered in the florist trade are peppers (*Capsicum* spp.) and holly branches (*Ilex* spp.) with berries.

hitchhiking pest. insects or other pests that are **not** directly associated with their host material and that move with cargo, in baggage, or at large in carriers.

import permit. official document issued by the importing country authorizing the importation of a commodity in accordance with specified phytosanitary requirements.

inflorescence. characteristic arrangement of flowers on a stalk or in a cluster.

inspectional unit. portion of a shipment used to determine what size sample should be inspected; quarantine action is taken on the inspectional unit.

intergeneric. existing or occurring between genera (hybridization).

noncommercial. goods **not** imported for profit or resale, generally for personal consumption.

noxious weeds. undesirable plant as specified by the Federal Noxious Weed Regulations. As defined by the Federal Noxious Weed Regulations, noxious weeds are "Any living stage (including, but not limited to seed and reproductive parts) of any parasitic or other plant or a kind, which is of foreign origin, is new to or not widely prevalent in the United States, and can directly or indirectly injure crops, other useful plants, livestock or poultry or other interests of agriculture, including irrigation or navigation or the fish or wildlife resources of the United States or the public health."

packing material. covering, stuffing, or holding apparatus used to protect, cushion, or brace goods during shipment, e.g., straw, plant litter, paper, vermiculite.

panicle. any pyramidal inflorescence with a main axis and subdivided branches as in oats, rice, and sorghum.

pathogen. organism capable of causing disease in a particular host or range of hosts, and obtaining its nutrients wholly or in part from another living organism, e.g., a microorganism such as a bacterium or fungus.

pest-risk level guide. aid to determine the extent of inspection of cut flowers based on pest risk; a risk level is given to kinds of flowers from specific countries (*see also Table 2-10* on page 2-14).

phytosanitary certificate. official document issued by an employee of the national plant protection organization of the exporting country attesting to the phytosanitary condition of plants or plant products (*see also foreign phytosanitary certificate* on page Glossary-2).

plant or portions of a plant. leaves, twigs, or other portions of plants or plant litter or debris as distinguished from clean fruits, vegetables, herbs, or other commercial articles.

preclearance. inspection and/or treatment of commodities by or under the supervision of PPQ officers in foreign countries and U.S. offshore locations in accordance with PPQ-approved phytosanitary requirements.

precleared. articles inspected and/or treated under PPQ monitoring/approval at origin and in compliance with PPQ regulations prior to U.S. arrival; precleared shipments are **always** accompanied by PPQ Form 203.

propagative structure. any plant part capable of reproduction or growth by itself.

sample. portion that is representative of the whole; a specimen.

smut. any of various destructive diseases of cereal grasses caused by parasitic fungi characterized by the transformation of various plant organs into dark brown or black, often dusty, masses of spores.

transit permit. document required in advance of arrival for the unloading, landing, or other movement of plants and plant products in cargo into and immediately through the United States listing specific conditions that **must** be met during the transit period.

treatment. chemical or physical procedure used to kill pests (e.g., fumigation, cold treatment, hot water dip, application of fungicide, vapor heat).

Cut Flowers and Greenery

Index

Numerics

280 User Guide 2-25

A

Abies spp. 3-4, 3-15
Acacia spp. 2-28, 3-4
Acer spp. 2-28, 3-5
Aceraceae 3-5
Actinidia spp. 3-5
Actinidiaceae 3-5
additional declaration 2-27, Glossary-1
adult flying insects 2-21
advisories 1-10
Aegilops spp. 3-6
Aesculus spp. 2-28, 3-6
Afghanistan
  Acacia spp. from 3-4
  Acer spp. from 3-5
  Aegilops spp. from 3-6
  Cotoneaster spp. from 3-25
  Hibiscus spp. from 3-32
  host plant material of ALB/CLB from 2-10
  Ilex spp. from 3-34
  Pyracantha spp. from 3-49
  Salix spp. from 3-52, 3-55
  Viburnum spp. from 3-56
Africa 2-14, 2-15
African corn lily 2-15
Agavaceae
  Cordyline spp. 3-23
  Dracaena spp. 3-28
agricultural inspection 2-4
air waybill 2-19, 2-24
air waybill of lading 2-3
Ajania pacifica 3-7
Albania
  Salix spp. from 3-52
  Ulmus spp. from 3-55
Alberta 3-54, 3-60
Albizia spp. 2-28
alcohol 2-5
alder 3-8
Algeria 3-43
  Aegilops spp. from 3-6
almond 3-49, B-1
Alnus spp. 2-28, 3-8
Alpinia purpurata 2-26
Alstroemeria 2-14
Amaryllis spp. 2-13, 2-14
American National Standards Institute 1-10
Ananas spp. 1-7, 3-8
Andorra
  Ajania pacifica from 3-7
  Chrysanthemum spp. from 3-13
  Leucanthemella spp. from 3-35
  Nipponanthemum spp. from 3-39
  Salix spp. from 3-52
  Ulmus spp. from 3-55
Anemone 2-14
Anoplophora chinensis
  Aesculus spp. hosts of 3-6
Anoplophora glabripennis
  Aesculus spp. hosts of 3-6
Anthurium spp. 2-13, 2-14, 2-26
Antirrhinum majus 2-14
aphids 2-21
APHIS Printing, Distribution, and Mail Services Center 1-14
apple B-1
approved growing media 1-7
approved treatment facility 2-6
apricot 3-49, B-1
AQAS database 2-23
Aquifoliaceae 3-34
Araceae 2-24, 2-26
Aralia spp. 2-28
Araucariaceae 3-14
arboretums 1-5
Arecaceae 3-9, 3-12, 3-43
Argentina
  Ajania pacifica from 3-7
  Antirrhinum majus from 2-14
  Chrysanthemum spp. from 2-14, 3-13
  Geranium from 2-15
  Leucanthemella spp. from 3-35
  Nipponanthemum spp. from 3-39
Arizona 3-54, 3-60
Armenia
  Aegilops spp. from 3-6
  Salix spp. from 3-52
  Ulmus spp. from 3-55
artichoke 3-27
arum lily 2-13, 2-17
Asia 2-14, 2-15
Asian longhorned beetle 2-8, 2-28, 2-29
Aster 2-14
Asteraceae
  Ajania pacifica (yellow splash) 3-7
  Chrysanthemum spp. (mum) 3-13
  Cynara spp. (artichoke) 3-27

Gerbera spp. 2-26
Leucanthemella spp. (high daisy, giant daisy, max-chyrsanthemum, Shasta daisy) 3-35
Liatris spp. 2-24
Nipponanthemum spp. (Nipon daisy, nipon-chrysanthemum) 3-39
Aurantioideae 3-51
Australia
Acacia spp. from 3-4
Aegilops spp. from 3-6
Ajania pacifica from 3-7
Alstroemeria from 2-14
Amaryllis spp. from 2-13
Anthurium spp. from 2-13
Chrysanthemum spp. from 3-13
cut flowers and greenery from 2-12
Cymbidium spp. from 2-13
Freesia spp. from 2-13
Gypsophila from 2-15
Hippeastrum spp. from 2-13
Hyacinthus spp. from 2-13
Leucanthemella spp. from 3-35
Lillium spp. from 2-13
Narcissus spp. from 2-13
Nipponanthemum spp. from 3-39
orchids from 2-16
Phalaenopsis spp. from 2-13
Proteaceae (protea) from 3-47
Rosa spp. from 2-13
Tulipa spp. from 2-13
Zantedeschia spp. from 2-13
Austria
Acacia spp. from 3-4
Acer spp. from 3-5
Ajania pacifica from 3-7
Chrysanthemum spp. from 3-13
Leucanthemella spp. from 3-35
Nipponanthemum spp. from 3-39
Salix spp. from 3-52
Ulmus spp. from 3-55
authority 1-4
authorize or inspect movement 2-11
authorized treatment 2-22
autumn-gold 2-14, 3-26
Azerbaijan
Aegilops spp. from 3-6
Salix spp. from 3-52
Ulmus spp. from 3-55

B

baby's breath 2-15
bacteria 1-8
Bactrocera correcta 3-50
bagasse 1-6
bags 2-5
bamboo 3-10
bamboo smut 3-10
Bambuseae 3-10
Bambusoideae (bamboo) 3-10
banana 3-37
Bangladesh
Aegilops spp. from 3-6
Barberton daisy 2-15
Bayoud disease 3-43
beautyberry 3-10
Beccariophoenix madagascariensis 3-9
Belarus
Aegilops spp. from 3-6
Ajania pacifica from 3-7
Chrysanthemum spp. from 3-13
Leucanthemella spp. from 3-35
Nipponanthemum spp. from 3-39
Salix spp. from 3-52
Ulmus spp. from 3-55
Belgium
Acacia spp. from 3-4
Acer spp. from 3-5
Ajania pacifica from 3-7
Chrysanthemum spp. from 3-13
Leucanthemella spp. from 3-35
Nipponanthemum spp. from 3-39
Salix spp. from 3-52
Ulmus spp. from 3-55
bell pepper 3-10
belladonna 2-14
berzelia 2-14
Betula spp. 2-28
Betulaceae 3-8
bill of lading 2-19, 2-24
bird of paradise 2-17, 2-26
bird pepper 3-10
black helleborus 3-32
black spots 2-21
black-eyed Susan 2-17
blazing star 2-15, 2-17, 2-24, 3-55
bleached, chemically treated, dried, or dyed plant material 1-3
blight 1-7
boat orchid 2-13
Bolivia 2-16
borers 3-14
Bosnia and Herzegovina
Ajania pacifica from 3-7
Chrysanthemum spp. from 3-13
Leucanthemella spp. from 3-35
Nipponanthemum spp. from 3-39
Salix spp. from 3-52
Ulmus spp. from 3-55
botanical gardens 1-5
bouquet 2-17
box holly 2-17, 3-51
boy flower 2-13
Brachyelytreae 3-10
bracteal heads 2-21
branch, definition of Glossary-1
Brazil
Ajania pacifica from 3-7
Chrysanthemum spp. from 3-13
Leucanthemella spp. from 3-35
Nipponanthemum spp. from 3-39
Brevipalpus chilensis 2-17
bridal-wreath 2-17
British Columbia 3-54, 3-60
Brodiaea 2-14, 2-17
brokers 2-3

Bromeliaceae 3-8
broomcorn 1-7, 3-54, Glossary-1
broomcorn *(Sorghum bicolor)* 3-54
Broussonetia spp. 2-28
Brunei
  Ajania pacifica from 3-7
  Chrysanthemum spp. from 3-13
  Leucanthemella spp. from 3-35
  Nipponanthemum spp. from 3-39
brunia 2-14
brush 2-5
buckeye 3-6
buckthorn *(Rhamnus cathartica L.)* 3-33
bulbs not covered in the Cut Flowers and Greenery Import Manual 1-3
Bulgaria
  Acacia spp. from 3-4
  Acer spp. from 3-5
  Aegilops spp. from 3-6
  Ajania pacifica from 3-7
  Chrysanthemum spp. from 3-13
  Leucanthemella spp. from 3-35
  Nipponanthemum spp. from 3-39
  Salix spp. from 3-52
  Ulmus spp. from 3-55
burlap 1-6
butcher's broom 2-17, 3-51
buttercup, Persian 2-16
button snake-root 2-15

C

cabbage tree *(Cordyline* spp.) 3-23
Cajanus spp. 2-28
California 3-54, 3-60
calla lily 2-13, 2-17, 2-24
Callicarpa spp. 3-10
calyx 2-20
Camellia spp. 2-28
Canada
  Aegilops spp. from 3-6
  Cotoneaster spp. from 3-25
  Cynara spp. from 3-27
  Hippophae spp. from 3-33
  host plant material of ALB/CLB from 2-10
  Ilex spp. from 3-34
  Loranthaceae (mistletoe) from 3-36
  Poaceae (grasses) from 3-45
  Proteaceae (protea) from 3-47
  Ricinus communis from 3-50
  Triticum spp. from 3-54
Canary Islands
  Ajania pacifica from 3-7
  Chrysanthemum spp. from 3-13
  Leucanthemella spp. from 3-35
  Nipponanthemum spp. from 3-39
cankers 3-14
Caprifoliaceae 3-54
Capsicum spp. 3-10
cargo 1-6
cargo interception 2-6
carnation 2-15
Carpinus spp. 2-28
carriers 1-6
Carya spp. 2-28
cast skins 3-9
Castanea spp. 2-28, 3-10
Castanopsis spp. 2-28
castor 3-50
Casuarina spp. 2-28
Catalpa spp. 2-28
Cathaya 3-15
CBP Agriculture Specialists 1-4, 1-14
cedar (*Cedrus* spp. 3-11
Cedrus spp. (cedar) 3-11, 3-15
Celtis spp. 2-28
Centers for Disease Control (CDC) 3-28
Ceratitis capitata 3-10, 3-14, 3-44
Cercidiphyllum spp. 2-28
Cercis spp. 2-28
certificate, definition of Glossary-1
Chaenomeles spp. 1-7, 2-28, 3-11, B-1
chain of command 1-14
Chamaedorea spp. 3-12
Chamaelaucium 2-14
Channel Islands 2-12, 2-13
cherry 3-49, B-1
cherry laurel 3-49, B-1
chestnut 3-10
chestnut blight 3-10
Chile
  Aegilops spp. from 3-6
  Ajania pacifica from 3-7
  Chrysanthemum spp. from 2-14, 3-13
  Cotoneaster spp. from 3-25
  Dianthus from 2-15
  Hippophae spp. from 3-33
  Ilex spp. from 3-34
  Leucanthemella spp. from 3-35
  Nipponanthemum spp. from 3-39
  precleared flowers and greenery from 2-2, 2-26
  Ricinus communis from 3-50
  Rosa from 2-16
chili pepper 3-10
China
  Acacia spp. from 3-4
  Acer spp. from 3-5
  Aegilops spp. from 3-6
  Ajania pacifica from 3-7
  Chrysanthemum spp. from 3-13
  Cotoneaster spp. from 3-25
  Hibiscus spp. from 3-32
  host plant material of ALB/CLB from 2-10
  Ilex spp. from 3-34
  Leucanthemella spp. from 3-35
  Nipponanthemum spp. from 3-39
  Pyracantha spp. from 3-49
  Salix spp. from 3-52, 3-55
  Viburnum spp. from 3-56
chincherinchee 2-16
Chinese-lantern plant 3-44
Christmas trees 3-14
Christmas-rose 3-32
Chrysalidocarpus decipiens 3-9
Chrysanthemum spp. 2-14, 3-13
chrysanthemum white rust 2-17, 3-35, B-2

Chrysanthemum x morifolium 3-13
CITES 1-5, 2-11
CITES permits A-11
citrus canker 1-6
citrus longhorned beetle 2-8, 2-28, 2-29
Citrus spp. 3-13, 3-51
Clusiaceae 3-33
CNMI 3-31, 3-41, 3-51
Code of Federal Regulations 1-6
Codiaeum variegatum 2-26
Coffea spp. 1-8, 3-14
coffee 1-8, 3-14
coffee berry borer 1-8, 3-14
coffee leaf rust 1-8
Colombia
  Ajania pacifica from 3-7
  Anthurium spp. from 2-14
  Antirrhinum majus from 2-14
  Aster from 2-14
  Chrysanthemum spp. from 2-14, 3-13
  Eustoma grandiflora from 2-15
  Freesia from 2-15
  Leucanthemella spp. from 3-35
  Lilium from 2-16
  Nipponanthemum spp. from 3-39
  Ornithogalum from 2-16
  Rosa from 2-16
  rose bouquets from 2-16
  Ruscus from 2-17
  Zantedeschia from 2-17
Colorado 3-54
commercial shipments, definition of Glossary-1
coneflower 2-17
Coniferae 2-8, 3-14
conifers 3-14
Consolida 2-15
contaminants 2-22, Glossary-1
control data 1-11
controlled import permit
  applying for A-8
  authorizing shipment for cargo cleared at specific POE 2-6
  description of A-7
  issuing A-8
  processing A-8, A-9
  prohibiting entry for plants not authorized by 2-7
Convention on International Trade in Endangered Species of Wild Fauna and Flora 1-5
conventions 1-10
cooler 2-4
coralberry (*Symphoricarpos)* 3-54
Cordyline spp. 3-23
Cordyline terminalis 2-26
corn and closely related plants 3-60
corn brown spot 1-7
corn diseases 1-7
Cornus spp. 2-28
Corylus spp. 2-28
Costa Rica
  Anthurium spp. from 2-14
  Aster from 2-14
  Dianthus from 2-15
  Gerbera from 2-15
  Lilium from 2-16
  Rosa from 2-16
  rose bouquets from 2-16
  Strelitzia from 2-17
  Zantedeschia from 2-17
Cotoneaster spp. 2-28, 3-24
cotton 3-31, B-1
cotton gin 1-6
cottonseed 1-6
cottonseed cake 1-6
covers 1-6
crabapple B-1
cranesbill 2-15
Crataegus spp. 2-28
Croatia
  Acacia spp. from 3-4
  Acer spp. from 3-5
  Ajania pacifica from 3-7
  Chrysanthemum spp. from 3-13
  Cotoneaster spp. from 3-25
  Hibiscus spp. from 3-32
  host plant material of ALB/CLB from 2-10
  Ilex spp. from 3-34
  Leucanthemella spp. from 3-35
  Nipponanthemum spp. from 3-39
  Pyracantha spp. from 3-49
  Salix spp. from 3-52, 3-55
  Ulmus spp. from 3-55
  Viburnum spp. from 3-56
Crocosmia spp. 2-14, 3-26
croton 2-26
Cryphonectria parasitica, chestnut blight 3-10
Cryptomeria spp. 2-28
culm, definition of Glossary-1
Cupressaceae 3-14, 3-26, 3-35
Customs and Border Protection (CBP) officers 1-4
Customs bond 2-6
cut cotton articles 1-6
cut flowers and greenery
  7 CFR 319.74 1-8
  approved for preclearance 2-25
  definition of Glossary-1
  eligible for release 2-25
  inspecting 2-20
  precleared 2-25
  under the National Release Program 2-24
Cycadaceae (cycads) 3-26
cycads (Cycadaceae) 3-26
Cydonia spp. 1-7, 2-28, 3-27, B-1
Cymbidium spp. 2-13, 2-14, 3-40
Cynara spp. 3-27
Cyperaceae 2-26
Cyperus spp. 2-26
Cyprus
  Acacia spp. from 3-4
  Acer spp. from 3-5
  Aegilops spp. from 3-6
  Ajania pacifica from 3-7
  Chrysanthemum spp. from 3-13
  Leucanthemella spp. from 3-35
  Nipponanthemum spp. from 3-39
  Salix spp. from 3-52
  Ulmus spp. from 3-55

Cytisus 2-14
Czech Republic 3-35, 3-39
  Acacia spp. from 3-4
  Acer spp. from 3-5
  Ajania pacifica from 3-7
  Chrysanthemum spp. from 3-13
  Salix spp. from 3-52
  Ulmus spp. from 3-55

D

daffodil 2-3, 2-13, 2-16
date palm 3-43
decision tables 1-11
declarations 2-3
decorative fruit, definition of Glossary-2
defoliators 3-14
Delphinium 2-15
Democratic People's Republic of Korea
  Acacia spp. from 3-4
  Acer spp. from 3-5
  Aegilops spp. from 3-6
  Cotoneaster spp. from 3-25
  Hibiscus spp. from 3-32
  host plant material of ALB/CLB from 2-10
  Ilex spp. from 3-34
  Pyracantha spp. from 3-49
  Salix spp. from 3-52, 3-55
  Viburnum spp. from 3-56
Dendrobium spp. 3-40
Denmark
  Acacia spp. from 3-4
  Acer spp. from 3-5
  Ajania pacifica from 3-7
  Chrysanthemum spp. from 3-13
  Leucanthemella spp. from 3-35
  Nipponanthemum spp. from 3-39
  Salix spp. from 3-52
  Ulmus spp. from 3-55
Department of the Interior 1-9
designated inspection area 2-3
designated ports 1-9
Dianthus spp. 2-15, 2-24
disease, definition of Glossary-2
disposable gloves 2-20
documentation, National Cut Flower Release Program 2-25
Dominican Republic
  Aster from 2-14
  Chrysanthemum spp. from 2-14
  Dianthus from 2-15
  Liatris from 2-15
  Lilium from 2-16
  Rosa from 2-16
Douglas fir 3-14
downy mildew 1-7
Dracaena spp. 2-26, 3-28
dragon tree 3-28
dried, definition of Glossary-2
Dryocosmus kuriphilus Yasmatus 3-10
Dryopteridaceae 2-26
dwarf banana 3-37
Dypsis decaryi 3-9
Dypsis decipiens 3-9

E

early instar larvae 2-21
Ecuador
  Ajania pacifica from 3-7
  Alstroemeria from 2-14
  Chrysanthemum spp. from 2-14, 3-13
  Eustoma grandiflora from 2-15
  Gerbera from 2-15
  Leucanthemella spp. from 3-35
  Liatris from 2-15
  Lilium from 2-16
  Limonium from 2-16
  Nipponanthemum spp. from 3-39
  Rosa from 2-16
  rose bouquets from 2-16
  Ruscus from 2-17
  Zantedeschia from 2-17
Egypt
  Aegilops spp. from 3-6
Elaeagnaceae 3-33
Elaeagnus spp. 2-28
Emergency Action Notification 2-6, 2-22
enabling legislation 1-4
Endangered Species Act 1-5, 2-11
Endangered Species Act (ESA) 3-6
endangered species convention 1-9
endemic, definition of Glossary-2
England 2-12, 2-13
English laurel 3-49, B-1
Entyloma oryzae 1-7
Epiphyas postvittana 2-12, 3-56
Ericaceae 3-42
Eriobotrya spp. 2-28
Erwinia salicis (watermark disease) 3-52
Eryngium 2-15
Estonia
  Acacia spp. from 3-4
  Acer spp. from 3-5
  Aegilops spp. from 3-6
  Ajania pacifica from 3-7
  Chrysanthemum spp. from 3-13
  Leucanthemella spp. from 3-35
  Nipponanthemum spp. from 3-39
  Salix spp. from 3-52
  Ulmus spp. from 3-55
Euphorbia 2-15
Euphorbiaceae 2-26, 3-50
Europe 2-14, 2-15, 3-5
European corn borer 1-7, 3-60
European Union
  Acacia spp. from 3-4
  Acer spp. from 3-5
  Cotoneaster spp. from 3-25
  Hibiscus spp. from 3-32
  host plant material of ALB/CLB from 2-10
  Ilex spp. from 3-34
  Pyracantha spp. from 3-49
Eustoma grandiflora 2-15
exotic fruit flies 3-8

F

Fabaceae 3-4
Fagaceae 3-10
Fagus spp. 2-28
Falkland Islands
  Aegilops spp. from 3-6
false dragonhead 2-16
fans 2-3
fecal material 2-21
Federal noxious weeds 2-9
Federal Plant Pest Regulations 1-8
fennel-flower (*Nigella* spp.) 3-38
ferns (Polypodiophyta) 3-46
Ficus spp. 2-28
Field Office Agriculture Liaison 1-14
field seed 1-6
filler and greenery, definition of Glossary-2
Finland
  Acacia spp. from 3-4
  Acer spp. from 3-5
  Ajania pacifica from 3-7
  Chrysanthemum spp. from 3-13
  Leucanthemella spp. from 3-35
  Nipponanthemum spp. from 3-39
  Salix spp. from 3-52
  Ulmus spp. from 3-55
fir 3-4, 3-14
firethorn 3-49
flamingo flower 2-13
flashlight 2-5
florist's chrysanthemum 3-13
flower bracts 2-17
flowering banana 3-37
flowering quince 3-11, B-1
flowers not covered in the Cut Flowers and Greenery Import Manual 1-3
flowers, inspecting 2-20
fluorescent lighting 2-5
flying insects 2-21
footnotes 1-12
foreign cotton and covers 1-6
foreign phytosanitary certificates 2-2, 2-3, 2-7, 2-11, Glossary-2
forklifts 2-4
Forsythia 2-15
Fortunella spp. (kumquat) 3-30
France
  Acacia spp. from 3-4
  Acer spp. from 3-5
  Ajania pacifica from 3-7
  Chrysanthemum spp. from 3-13
  Leucanthemella spp. from 3-35
  Nipponanthemum spp. from 3-39
  Salix spp. from 3-52
  Ulmus spp. from 3-55
Fraxinus spp. 2-28, 3-31
Freesia spp. 2-13, 2-15
freight forwarders 2-3
fresh fruits and vegetables 1-7
fresh fruits not covered in the Cut Flowers and Greenery Import Manual 1-3
fresh, cut articles not covered in the Cut Flowers and Greenery Import Manual 1-3
fronds not covered in the Cut Flowers and Greenery Import Manual 1-3
frozen fruits and vegetables 1-7
fruit and melon flies 1-7
fruit flies 3-10
fruit pods not covered in the Cut Flowers and Greenery Import Manual 1-3
fruit, definition of Glossary-2
fruits and vegetables 1-7
fumigation certificate of treatment for palm fronds 3-12
fungi 1-8
Fusarium oxysporum var. *albedinis* 3-43

G

gall wasp 3-10
garbage 1-9
garden croton 2-26
garden montbretia 2-14
garden montbretia (*Crocosmia* spp.) 3-26
gay-feather 2-15
general inspection procedures 2-7
general inspection table 2-4
George Bush Intercontinental Airport 2-23
Georgia
  Aegilops spp. from 3-6
  Salix spp. from 3-52
  Ulmus spp. from 3-55
Geraniaceae 3-42
Geranium 2-15
Gerbera spp. 2-15, 2-26
Germany
  Acacia spp. from 3-4
  Acer spp. from 3-5
  Ajania pacifica from 3-7
  Chrysanthemum spp. from 3-13
  Leucanthemella spp. from 3-35
  Nipponanthemum spp. from 3-39
  Salix spp. from 3-52
  Ulmus spp. from 3-55
Germplasm Resources Information Network 2-2
giant daisy 3-35
Gladiolus spp. 2-15, 2-26, 3-31
Globodera pallida 1-6
Globodera rostochiensis 1-6
Gloriosa 2-15
glory lily 2-15
gloves 2-5
glume blotch 1-7
goatgrass 3-6
golden-bells 2-15
Gossypium spp. 3-31, B-1
grain 1-6
grape B-1
grape-hyacinth 2-16
grasses (Poaceae) 3-45
Greece
  Acacia spp. from 3-4
  Acer spp. from 3-5
  Aegilops spp. from 3-6
  Ajania pacifica from 3-7

Chrysanthemum spp. from 3-13
Leucanthemella spp. from 3-35
Nipponanthemum spp. from 3-39
Salix spp. from 3-52
Ulmus spp. from 3-55
green hellebore 3-32
greenery, inspecting 2-20
Grevillea spp. 2-28
ground cherry 3-44
Guam 3-31, 3-41, 3-51
bagasse and sugarcane products to 1-6
Guam and the Commonwealth of the Northern Mariana Islands (CNMI) 3-3
Guatemala 2-15, 2-16, 2-17
Aegilops spp. from 3-6
guava fruit fly 3-50
Guelder-rose *(Viburnum* spp.) 3-56
Guernsey lily 2-16
Gypsophila 2-15

H

hand lens 2-5
Hartsfield-Jackson Atlanta International Airport 2-23
Hawaii 1-8, 1-9
Ananas spp. entering 3-8
heading levels 1-12
Hedera spp. 2-28
Heliconia spp. 2-26
Heliconiaceae 2-26
Helleborus spp. 3-32
Hemileia vastatrix 1-8, 3-14
hemlock 3-14
herbs 1-7
herbs not covered in the Cut Flowers and Greenery Import Manual 1-3
Hibiscus spp. 2-28, 3-32
high daisy 3-35
Hippeastrum spp. 2-13, 2-15
Hippocastanaceae 3-6
Hippophae spp. 3-33
hitchhiking pest, definition of Glossary-2
hold, regulatory action 2-6
holly 3-34
hornworts 2-29
horse-chestnut 3-6
horse-tongue 3-51
hulls 1-6
Hungary
Acacia spp. from 3-4
Acer spp. from 3-5
Aegilops spp. from 3-6
Ajania pacifica from 3-7
Chrysanthemum spp. from 3-13
Leucanthemella spp. from 3-35
Nipponanthemum spp. from 3-39
Salix spp. from 3-52
Ulmus spp. from 3-55
hyacinth 2-13, 2-15
Hyacinthus spp. 2-13, 2-15
Hypericum spp. 2-15, 3-33
Hypothenemus hampei 1-8, 3-14

I

Iceland
Ajania pacifica from 3-7
Chrysanthemum spp. from 3-13
Leucanthemella spp. from 3-35
Nipponanthemum spp. from 3-39
Salix spp. from 3-52
Ulmus spp. from 3-55
Idaho 3-54, 3-60
Ilex spp. 2-28, 3-34
import permit 2-2, 2-6, 2-7, Glossary-2
importers 2-3
inadmissible plant parts 2-22
India
Aegilops spp. from 3-6
Indian corn 1-7
Indonesia
Acacia spp. from 3-4
Acer spp. from 3-5
Cotoneaster spp. from 3-25
Hibiscus spp. from 3-32
host plant material of ALB/CLB from 2-10
Ilex spp. from 3-34
Pyracantha spp. from 3-49
Salix spp. from 3-52, 3-55
Viburnum spp. from 3-56
infectious spores 2-17
infested articles 2-6
inflorescence, definition of Glossary-2
inflorescences 2-11, 2-20, 3-8, 3-10, 3-14
insect larvae 2-21
insects 1-8, 2-21, 2-22, 2-23
inspecting cut flowers and greenery
actions based on pest findings 2-22
authorize shipment 2-6
equipment 2-5
general 2-20
hold cargo 2-6
information needed 2-2
inspection area 2-3
inspection surface 2-4
lighting 2-5
materials needed 2-5
preparation for 2-22
procedures 2-7
prohibit entry 2-6
regulatory action 2-5
release cargo 2-7
sample size 2-18
what is needed 2-3
inspection procedures 2-7
inspection surface 2-4, 2-21
inspection table 2-4
inspectional operations 2-3
inspectional unit 2-19, 2-22
inspectional unit, definition of Glossary-2
intergeneric, definition of Glossary-2
interviews with importers 2-3
invertebrate animals 1-8
invoices 2-3
Iran
Aegilops spp. from 3-6

Iraq
Aegilops spp. from 3-6
Ireland 3-47
Acacia spp. from 3-4
Acer spp. from 3-5
Ajania pacifica from 3-7
Chrysanthemum spp. from 3-13
Leucanthemella spp. from 3-35
Nipponanthemum spp. from 3-39
Salix spp. from 3-52
Ulmus spp. from 3-55
Iridaceae 2-26, 3-26, 3-55, 3-60
Isikonkwane 3-28
Isle of Man 2-12, 2-13
Israel
Aegilops spp. from 3-6
Anemone from 2-14
Chamaelaucium from 2-14
Narcissus from 2-16
Ranunculus from 2-16
Ruscus from 2-17
Italy
Acacia spp. from 3-4
Acer spp. from 3-5
Aegilops spp. from 3-6
Ajania pacifica from 3-7
Chrysanthemum spp. from 3-13
Cytisus from 2-14
Leucanthemella spp. from 3-35
Nipponanthemum spp. from 3-39
Ruscus from 2-17
Salix spp. from 3-52
Ulmus spp. from 3-55
Ixia 2-15

J

Jack-in-the-green 3-38
Jamaica 2-2, 2-14, 2-26
Japan
Acacia spp. from 3-4
Acer spp. from 3-5
Aegilops spp. from 3-6
Ajania pacifica from 3-7
Chrysanthemum spp. from 3-13
Cotoneaster spp. from 3-25
Hibiscus spp. from 3-32
host plant material of ALB/CLB from 2-10
Ilex spp. from 3-34
Leucanthemella spp. from 3-35
Nipponanthemum spp. from 3-39
Pyracantha spp. from 3-49
Salix spp. from 3-52, 3-55
Viburnum spp. from 3-56
Japanese snowball 3-56
Japanese-lantern 3-44
Japanese-lantern (*Physalis* spp.) 3-44
John F. Kennedy International Airport 2-23
Juglans spp. 2-28
juniper 3-35
Juniperus spp. 3-15, 3-35

K

Karnal bunt 1-8, 3-54
Kazakhstan
Aegilops spp. from 3-6
Salix spp. from 3-52
Ulmus spp. from 3-55
Keteleeria 3-15
kiwi 3-5
knife 2-5
Koelreuteria spp. 2-28
Korea
Ajania pacifica from 3-7
Chrysanthemum spp. from 3-13
Leucanthemella spp. from 3-35
Nipponanthemum spp. from 3-39
Kosovo
Ajania pacifica from 3-7
Chrysanthemum spp. from 3-13
Leucanthemella spp. from 3-35
Nipponanthemum spp. from 3-39
Salix spp. from 3-52
Ulmus spp. from 3-55
Kyrgyzstan
Aegilops spp. from 3-6

L

labels 2-3
Lagerstroemia spp. 2-28
Lamiaceae 3-10
laminate 2-4
Larix 3-15
larkspur 2-15
larvae 2-21
Latvia
Acacia spp. from 3-4
Acer spp. from 3-5
Aegilops spp. from 3-6
Ajania pacifica from 3-7
Chrysanthemum spp. from 3-13
Leucanthemella spp. from 3-35
Nipponanthemum spp. from 3-39
Salix spp. from 3-52
Ulmus spp. from 3-55
laurustine 3-56
leaf smut 1-7
leafminers 2-23
leather leaf fern 2-26
leaves not covered in the Cut Flowers and Greenery Import Manual 1-3
legislative acts 1-4
Lemurophoenix halleuxii 3-9
lenten-rose 3-32
lepidopteras 2-23
lesions 2-17
Leucadendron 2-15
Leucanthemella spp. 3-35
Leucospermum 2-15
level of pest risk, determining 2-13
Liatris spp. 2-15, 2-24
Libya
Aegilops spp. from 3-6

lichens 2-29
Liechtenstein
Ajania pacifica from 3-7
Chrysanthemum spp. from 3-13
Leucanthemella spp. from 3-35
Nipponanthemum spp. from 3-39
Salix spp. from 3-52
Ulmus spp. from 3-55
light brown apple moth 2-8, 2-27, 3-56
lighting 2-5
lighting recommendations 2-5
lighting, description of 2-5
Ligustrum spp. 3-36
Liliaceae 2-24, 2-26, 3-51
Lilium spp. 2-13, 2-16, 2-24
lily 2-13, 2-16, 2-24
lily-of-the-valley 2-21
limitations, National Cut Flower Release Program 2-24
Limonium 2-16
Lindera spp. 2-28
lint 1-6
linters 1-6
Liquidambar spp. 2-28
Lisianthus 2-15
Litchi spp. 2-28
Lithuania
Acacia spp. from 3-4
Acer spp. from 3-5
Aegilops spp. from 3-6
Ajania pacifica from 3-7
Chrysanthemum spp. from 3-13
Leucanthemella spp. from 3-35
Nipponanthemum spp. from 3-39
Salix spp. from 3-52
Ulmus spp. from 3-55
liverworts 2-29
Loranthaceae 2-8, 3-36
Loranthaceae (mistletoe) 3-36
Los Angeles International Airport 2-23
love-in-a-mist *(Nigella* spp.) 3-38
lucky bamboo *(Dracaena* spp.)
regulatory action 3-28
Luxembourg
Acacia spp. from 3-4
Acer spp. from 3-5
Ajania pacifica from 3-7
Chrysanthemum spp. from 3-13
Leucanthemella spp. from 3-35
Nipponanthemum spp. from 3-39
Salix spp. from 3-52
Ulmus spp. from 3-55
Lygodium
flexuosum (maidenhair creeper) 3-46
microphyllum (old world climbing fern) 3-46

M

Maackia spp. 2-28
Macedonia
Ajania pacifica from 3-7
Chrysanthemum spp. from 3-13
Leucanthemella spp. from 3-35
Nipponanthemum spp. from 3-39
Salix spp. from 3-52
Ulmus spp. from 3-55
Madagascar
Acacia spp. from 3-4
Acer spp. from 3-5
Cotoneaster spp. from 3-25
Hibiscus spp. from 3-32
host plant material of ALB/CLB from 2-10
Ilex spp. from 3-34
Pyracantha spp. from 3-49
Salix spp. from 3-52, 3-55
Viburnum spp. from 3-56
MAF BNZ Exports Phytosanitary Compliance Program 2-27
magnifier 2-5
maidenhair creeper 3-46
mail 1-6
maize 1-7
Malaysia
Acacia spp. from 3-4
Acer spp. from 3-5
Ajania pacifica from 3-7
Chrysanthemum spp. from 3-13
Cotoneaster spp. from 3-25
Hibiscus spp. from 3-32
host plant material of ALB/CLB from 2-10
Ilex spp. from 3-34
Leucanthemella spp. from 3-35
Nipponanthemum spp. from 3-39
Pyracantha spp. from 3-49
Salix spp. from 3-52, 3-55
Viburnum spp. from 3-56
Mallotus spp. 2-28
Malta
Acacia spp. from 3-4
Acer spp. from 3-5
Ajania pacifica from 3-7
Chrysanthemum spp. from 3-13
Leucanthemella spp. from 3-35
Nipponanthemum spp. from 3-39
Salix spp. from 3-52
Ulmus spp. from 3-55
Malus spp. 1-7, 2-28, 3-36, B-1
Malvaceae 3-31, 3-32
manifests 2-3
Manitoba 3-54, 3-60
Manuals Unit 1-14
maple 3-5
Marojejya darianii 3-9
max-chrysanthemum 3-35
meal 1-6
meats 1-6
Mediterranean fruit fly 3-10, 3-14, 3-44
Melanomma glumarum 1-7
Melia spp. 2-28
Mexico
Aegilops spp. from 3-6
Ajania pacifica from 3-7
Chrysanthemum spp. from 3-13
Leucanthemella spp. from 3-35
Nipponanthemum spp. from 3-39
Miami International Airport 2-23

miscellaneous cargo 1-9
mistletoe 3-36
mite webbing 3-9
mites 1-8
Moldova
  Aegilops spp. from 3-6
  Ajania pacifica from 3-7
  Chrysanthemum spp. from 3-13
  Leucanthemella spp. from 3-35
  Nipponanthemum spp. from 3-39
  Salix spp. from 3-52
  Ulmus spp. from 3-55
mollusks 2-22
Monaco
  Ajania pacifica from 3-7
  Chrysanthemum spp. from 3-13
  Leucanthemella spp. from 3-35
  Nipponanthemum spp. from 3-39
  Salix spp. from 3-52
  Ulmus spp. from 3-55
Montbretia 2-16, 2-17
montbretia 2-14, 3-26
Montenegro
  Ajania pacifica from 3-7
  Chrysanthemum spp. from 3-13
  Leucanthemella spp. from 3-35
  Nipponanthemum spp. from 3-39
  Salix spp. from 3-52
  Ulmus spp. from 3-55
Morocco 3-43
  Aegilops spp. from 3-6
Morus spp. 2-28
mosses 2-29
moth orchid 2-13
MPI BNZ Exports Phytosanitary Compliance Program 3-48, 3-59
mulberry 3-10
multinational treaty 1-4, 1-5
mum 2-14, 3-13
Musa spp. 3-37
Musaceae 3-37
Muscari 2-16
Myanmar
  Acacia spp. from 3-4
  Acer spp. from 3-5
  Cotoneaster spp. from 3-25
  Hibiscus spp. from 3-32
  host plant material of ALB/CLB from 2-10
  Ilex spp. from 3-34
  Pyracantha spp. from 3-49
  Salix spp. from 3-52, 3-55
  Viburnum spp. from 3-56

N

Narcissus spp. 2-3, 2-13, 2-16
National Cut Flower Release Program (NCFRP)
  adding or deleting flowers 2-25
  documentation 2-25
  entering under 2-8
  flower/country combinations 2-24
  limitations 2-24
  ports participating in 2-9
  procedures 2-24
  protocol for 2-1, 2-23
  release under 2-7
National Plant Germplasm and Biotechnology Laboratory 2-6
Nebraska 3-54
nectarine 3-49, B-1
nematodes 1-8
Neodypsis decaryi 3-9
Nepal
  Aegilops spp. from 3-6
Nepenthaceae 3-38
Nepenthes spp. 3-38
Nepenthes spp. (pitcher plant) 3-38
Nerine 2-16
Netherlands 2-15, 3-25
  Acacia spp. from 3-4
  Acer spp. from 3-5
  Ajania pacifica from 3-7
  Amaryllis spp. from 2-14
  Anemone from 2-14
  Anthurium spp. from 2-14
  berzelia from 2-14
  Brodiaea from 2-14
  brunia from 2-14
  Chrysanthemum spp. from 3-13
  cut flowers and greenery from 2-12
  Cymbidium spp. from 2-14
  Delphinium=consolida (larkspur) from 2-15
  Eryngium from 2-15
  Euphorbia from 2-15
  Forsythia from 2-15
  Freesia from 2-15
  Gloriosa from 2-15
  Hippeastrum from 2-15
  Hippophae spp. from 3-33
  Hyacinthus from 2-15
  Ilex spp. from 3-34
  Ipheion from 2-14
  Ixia from 2-15
  Leucadendron from 2-15
  Leucanthemella spp. from 3-35
  Leucospermum from 2-15
  Liatris from 2-15
  Lilium from 2-16
  Montbretia from 2-16
  Muscari from 2-16
  Narcissus from 2-16
  Nerine from 2-16
  orchids from 2-16
  Ornithogalum from 2-16
  Phalaenopsis from 2-16
  Physostegia from 2-16
  Ranunculus from 2-16
  Ricinus communis from 3-50
  Rosa from 2-16
  Rudbeckia from 2-17
  Ruscus from 2-17
  Salix spp. from 3-52
  Scabiosa from 2-17
  Spiraea from 2-17
  Triteleia from 2-14, 2-17
  Tulipa from 2-17

Ulmus spp. from 3-55
Veronica from 2-17
Zantedeschia from 2-17
Nevada 3-54, 3-60
New Brunswick 3-54, 3-60
New Caledonia 2-12, 2-13
Proteaceae (protea) from 3-47
New Mexico 3-60
New Zealand
Ajania pacifica from 3-7
Amaryllis spp. from 2-13
Anthurium spp. from 2-13
Chrysanthemum spp. from 3-13
Cotoneaster spp. from 3-25
cut flowers and greenery from 2-12
Cymbidium spp. from 2-13
Freesia spp. from 2-13
Hippeastrum spp. from 2-13
Hippophae spp. from 3-33
Hyacinthus spp. from 2-13
Ilex spp. from 3-34
Leucanthemella spp. from 3-35
Lilium spp. from 2-13, 2-16
Narcissus spp. from 2-13
Nipponanthemum spp. from 3-39
orchids from 2-16
Phalaenopsis spp. from 2-13
Proteaceae (protea) from 3-48
Rosa spp. from 2-13
Tulipa spp. from 2-13
Zantedeschia spp. from 2-13, 2-17
Newfoundland 3-54, 3-60
Nicolaia speciosa 2-26
nipon-chrysanthemum 3-39
Nipponanthemum spp. 3-39
Nippon-daisy 3-39
noncommercial, definition of Glossary-2
Northern Ireland 2-12, 2-13
Norway
Ajania pacifica from 3-7
Chrysanthemum spp. from 3-13
Leucanthemella spp. from 3-35
Nipponanthemum spp. from 3-39
Salix spp. from 3-52
Ulmus spp. from 3-55
notices of arrival 2-3
Nova Scotia 3-54, 3-60
noxious weed regulations, 7 CFR 360 1-9
noxious weeds 2-29
noxious weeds, definition of Glossary-3
numbering scheme 1-12
nutmeg-flower 3-38

O

obedient plant 2-16
Oceania 3-4
old-world climbing fern 3-46
Olea spp. 2-28
Oleaceae 3-31, 3-36
Oman
Aegilops spp. from 3-6
online manuals 2-5
Ontario 3-54, 3-60
Oospora oryzetorum 1-7
optimum lighting recommendations 2-5
oral permission A-2
orchid 2-16, 2-26, 3-40
Orchidaceae 2-26, 3-40
Oregon 3-54, 3-60
Orkney Islands 2-12, 2-13
Ornithogalum 2-16
Oryza sativa 1-7, 3-41
osier 3-52
Ostrinia nubilalis 3-60

P

packing lists 2-3
packing material, definition of Glossary-3
Pakistan
Aegilops spp. from 3-6
pallet jacks 2-4
palm fronds 3-12
Palmae 3-9
Palmillo *(Dracaena* spp.)
regulatory action 3-28
palms 3-9
Panama 2-15, 2-16
Pandanaceae 2-26
Pandanus spp. 2-26
panicle, definition of Glossary-3
paper clips 2-5
paprika pepper 3-10
papyrus 2-26
parasitic plants 1-8, 2-9, 2-29
Parrotia spp. 2-28
Participating ports under the National Cut Flower Release Program 2-23
passenger baggage 1-6
pathogen, definition of Glossary-3
pathogens 2-22, 2-23, 3-14
peach 3-49, B-1
pear 3-50, B-1
Pectinophora gossypiella 1-6, 3-31
Pectinophora gossypiella (pink bollworm) 3-32
pedestrians 2-4
Pelargonium spp. 3-42
pepper 3-10
permits 2-3
pernettya 3-42
Pernettya spp. 3-42
Peronospora maydis 1-7
Persea spp. 2-28
Persian buttercup 2-16
Peru
Ajania pacifica from 3-7
Chrysanthemum spp. from 3-13
Dianthus from 2-15
Leucanthemella spp. from 3-35
Nipponanthemum spp. from 3-39
Rosa from 2-16
Peruvian lily 2-14
pest risk level guide 2-14
pest risk level guide, definition of Glossary-3
pesticide 2-20

pests, quarantine-significant 2-23
Phaeomeria (=Nicolaia) speciosa 2-26
Phalaenopsis spp. 2-13, 2-16, 3-40
Philippines
Acacia spp. from 3-4
Acer spp. from 3-5
Cotoneaster spp. from 3-25
Hibiscus spp. from 3-32
host plant material of ALB/CLB from 2-10
Ilex spp. from 3-34
Pyracantha spp. from 3-49
Salix spp. from 3-52, 3-55
Viburnum spp. from 3-56
Phoenix spp. (date palm) 3-43
Photinia spp. 2-28
Phragmidium 2-17
Physalis spp. 3-44
Physalis spp. (ground cherry, Chinese-lantern plant, Japanese-lantern) 3-44
Physoderma diseases of maize 1-7
Physoderma maydis 1-7
Physoderma zeae–maydis 1-7
Physostegia 2-16
Phytophthora alni 3-8
phytosanitary certificates 2-2, 2-3, 2-7, A-12, Glossary-3
Picea spp. 3-15, 3-44
Pinaceae 3-4, 3-14, 3-44
pincushion flower 2-17
pine 3-14, 3-44
pink bollworm 1-6, 3-31
pink bollworm *(Pectinophora gossypiella)* 3-32
pinks 2-15
Pinus spp. 2-28, 3-44
pitcher plant
(*Nepenthes* spp.) 3-38
(*Sarracenia* spp.) 3-53
plant debris 2-22
Plant Inspection Station 2-22
plant material imported for planting or growing 1-3
plant or portions of a plant, definition of Glossary-3
plant pest carrier 1-9
plant pests 2-7
Plant Protection Act (PPA) of 2000 1-5
Plant Protection and Quarantine (PPQ) officers 1-4
plantain 3-37
plants for planting 1-7
Platanus spp. 2-28
plum 3-49
Poaceae
higher taxa 2-8
regulated by 7 CFR 319.37 1-7
Poaceae (grasses)
Aegilops spp.(goatgrass) 3-6
Oryza sativa (rice) 3-41
regulatory action 3-45
Saccharum spp. (sugarcane) 3-51
Sorghum bicolor (broomcorn) 3-54
Triticum spp. (wheat and intergeneric crosses) 3-54
Zea mays (corn and closely related plants) 3-60
Podocarpaceae 3-14
poinsettia 2-15
Poland
Acacia spp. from 3-4
Acer spp. from 3-5
Ajania pacifica from 3-7
Chrysanthemum spp. from 3-13
Leucanthemella spp. from 3-35
Nipponanthemum spp. from 3-39
Salix spp. from 3-52
Ulmus spp. from 3-55
Polygonum spp. 2-28
Polypodiophyta 3-46
Poncirus spp. 3-46
Populus spp. 2-28
port of entry 2-2
Ports of Entry participating in the National Cut Flower Release Program 2-23
Portugal
Acacia spp. from 3-4
Acer spp. from 3-5
Aegilops spp. from 3-6
Ajania pacifica from 3-7
Chrysanthemum spp. from 3-13
Leucanthemella spp. from 3-35
Nipponanthemum spp. from 3-39
Salix spp. from 3-52
Ulmus spp. from 3-55
potato cyst nematodes 1-6
potted plants not covered in the Cut Flowers and Greenery Import Manual 1-3
PPQ employees 1-14
PPQ Form 280 database 2-25
PPQ Form 309 2-5
PPQ Form 523 2-6, 2-22
PPQ permits A-1
PPQ plant inspection station 2-22
PPQ specialists 2-2
PPQ's Manuals Unit 1-14
preclearance, definition of Glossary-3
precleared articles 2-7
precleared cut flowers and greenery 2-25
precleared, definition of Glossary-3
Prince Edward Island 3-54, 3-60
privet 3-36
probe 2-5
procedures, general inspection 2-7
processed plant material not covered in the Cut Flowers and Greenery Import Manual 1-3
prohibit entry, regulatory action 2-6
propagative materials 1-7
propagative structure, definition of Glossary-3
protea 3-47
Proteaceae 2-8, 3-47
protected plants 2-29
protozoa 1-8
prune 3-49, B-1
Prunus spp. 1-7, 2-28, 3-49, B-1
Pseudolarix 3-15
Pseudomonas syringae pv. *actinidiae* 3-5
Pseudomonas syringae pv. *aesculi* 3-6
Pseudostuga spp. 3-49
Pseudotsuga spp. 3-15
Psidium spp. 2-28
Puccinia horiana 3-7, 3-13, 3-35

Puerto Rico 1-8, 1-9
purpose of the Cut Flowers and Greenery Import Manual 1-2
pustules 3-35
on *Chrysanthemum* spp. 2-17
Pyracantha spp. 2-28, 3-49
Pyrus spp 3-50
Pyrus spp. 1-7, 2-28, B-1

Q

quarantine pests 2-7
quarantine-significant pests 2-23
Quebec 3-54, 3-60
Quercus spp. 2-28
quince 3-27, B-1

R

Ralstonia solanacearum 3-42
Ranunculaceae 3-32, 3-38
Ranunculus 2-16
Ravenea louvelii 3-9
Ravenea rivularis 3-9
red ginger 2-26
red palm mite 3-9
red palm mites 3-37
regulated articles from Hawaii and the territories 1-6
regulated cargo 2-6
regulatory stamps 2-5
related documents 1-4
release, regulatory action 2-7
Republic of Ireland 2-12, 2-13
Republic of Korea
Acacia spp. from 3-4
Acer spp. from 3-5
Aegilops spp. from 3-6
Cotoneaster spp. from 3-25
Hibiscus spp. from 3-32
host plant material of ALB/CLB from 2-10
Ilex spp. from 3-34
Pyracantha spp. from 3-49
Salix spp. from 3-52, 3-55
Viburnum spp. from 3-56
Republic of South Africa
Ajania pacifica from 3-7
Chrysanthemum spp. from 3-13
Leucanthemella spp. from 3-35
Nipponanthemum spp. from 3-39
residue cargo 2-6, 2-11
Rhododendron spp. 2-28
Rhus spp. 2-28
rice
hulls 1-7
regulated by 7 CFR 319.55 1-7
regulatory action 3-41
seeds 1-7
straw 1-7
ricin 3-50
Ricinus communis 3-50
Riverdale Print Shop 1-14
Robinia spp. 2-28
Romania
Acacia spp. from 3-4
Acer spp. from 3-5
Aegilops spp. from 3-6
Ajania pacifica from 3-7
Chrysanthemum spp. from 3-13
Leucanthemella spp. from 3-35
Nipponanthemum spp. from 3-39
Salix spp. from 3-52
Ulmus spp. from 3-55
rooted plants not covered in the Cut Flowers and Greenery Import Manual 1-3
roots not covered in the Cut Flowers and Greenery Import Manual 1-3
Rosa spp.
eligible for release 2-24
Jamaica preclearance 2-26
moving directly from or through the Netherlands 2-13
pest risk level 2-16
Phragmidium found on 2-17
regulated for ALB/CLB 2-28
Rosaceae
Chaenomeles spp. (flowering quince) 3-11
Cotoneaster spp. 3-24
Cydonia spp. (quince) 3-27
Malus spp.(apple) 3-36
Prunus spp. (almond, apricot, cherry, cherry laurel, English laurel, nectarine, peach, plum, prune) 3-49
Pyracantha spp. (firethorn) 3-49
Pyrus spp. (pear) 3-50
Rosa spp. 2-24
roses precleared in Jamaica 2-26
rose 2-13, 2-16, 2-24, 2-26
rose bouquets 2-16, 2-24
Rubiaceae 3-14
Rubus spp. 2-28
Rudbeckia 2-17
Rumohra adiantiformis 2-26
Ruscaceae 3-51
Ruscus spp. 2-17, 3-51
Russia
Aegilops spp. from 3-6
Ajania pacifica from 3-7
Chrysanthemum spp. from 3-13
Leucanthemella spp. from 3-35
Nipponanthemum spp. from 3-39
Ulmus spp. from 3-52, 3-55
rusts 2-21, 3-14
Rutaceae 2-8, 3-13, 3-30, 3-51
Rutoideae 3-51

S

Saccharum spp. 3-51
Saccharum spp. (sugarcane) 3-51
safeguard regulations 1-9
safeguarding measures 2-22
safeguards 2-6
Sageretia spp. 2-28
Salicaceae 3-52

Salix 3-52
Salix spp. 1-7, 2-28
sample, definition of Glossary-3
San Juan Luis Munoz Marin International Airport 2-23
San Marino
  Ajania pacifica from 3-7
  Chrysanthemum spp. from 3-13
  Leucanthemella spp. from 3-35
  Nipponanthemum spp. from 3-39
  Salix spp. from 3-52
  Ulmus spp. from 3-55
Sapium spp. 2-28
Sarracenia spp. 3-53
Sarraceniaceae 3-53
Saskatchewan 3-54, 3-60
Satranala decussilvae 3-9
Scabiosa 2-17
scabious 2-17
scale 2-23
scented geranium 3-42
Sciadopityaceae 3-14
Sclerospora macrospora 1-7
Sclerospora sacchari 1-7
scope of the Cut Flowers and Greenery Import Manual 1-2
Scotch broom 2-14
Scotland 2-12, 2-13
Scrophulariaceae 3-54
sea buckthorn 3-33
sea holly 2-15
sea lavender 2-16
Secretary of Agriculture 1-4
secure area 2-4
seed cotton 1-6
seed heads not covered in the Cut Flowers and Greenery Import Manual 1-3
seed pods not covered in the Cut Flowers and Greenery Import Manual 1-3
seeds 1-4
Serbia
  Ajania pacifica from 3-7
  Chrysanthemum spp. from 3-13
  Leucanthemella spp. from 3-35
  Nipponanthemum spp. from 3-39
  Salix spp. from 3-52
  Ulmus spp. from 3-55
Shasta daisy 3-35
Shetland Islands 2-12, 2-13
signs of feeding 2-21
Singapore 2-16
Slovakia
  Acacia spp. from 3-4
  Acer spp. from 3-5
  Ajania pacifica from 3-7
  Chrysanthemum spp. from 3-13
  Leucanthemella spp. from 3-35
  Nipponanthemum spp. from 3-39
  Salix spp. from 3-52
  Ulmus spp. from 3-55
Slovenia
  Acacia spp. from 3-4
  Acer spp. from 3-5
  Ajania pacifica from 3-7
  Chrysanthemum spp. from 3-13
  Leucanthemella spp. from 3-35
  Nipponanthemum spp. from 3-39
  Salix spp. from 3-52
  Ulmus spp. from 3-55
slugs 1-8
smut, definition of Glossary-4
snails 1-8, 2-21, 2-23
snapdragon 2-14
snowball 3-56
snowberry 3-54
soil 2-22
Solanaceae 3-10, 3-44
son-of-India 3-28
Sophora spp. 2-28
Sorbus spp. 2-28
Sorghum bicolor 3-54
South Africa
  Aegilops spp. from 3-6
  Amaryllis spp. from 2-14
  berzelia from 2-14
  brunia from 2-14
  Hippeastrum from 2-15
  Leucadendron from 2-15
  Leucospermum from 2-15
  Lilium from 2-16
  Proteaceae from 3-48
Spain
  Acacia spp. from 3-4
  Acer spp. from 3-5
  Aegilops spp. from 3-6
  Ajania pacifica from 3-7
  Chrysanthemum spp. from 3-13
  Leucanthemella spp. from 3-35
  Nipponanthemum spp. from 3-39
  Salix spp. from 3-52
  Ulmus spp. from 3-55
spineless butcher's-broom 3-51
Spiraea 2-17
spirea 2-17
spirit weed 2-15
spring starflower 2-14
spruce 3-14, 3-44
spurge 2-15
St. John's wort 2-15, 3-33
star-of-Bethlehem 2-16
statice 2-16
stems not covered in the Cut Flowers and Greenery Import Manual 1-3
stinking hellebore 3-32
Strelitzia 2-17
Strelitzia reginae 2-26
Strelitziaceae 2-26
Striga spp. 3-54
Stylurus spp. 2-28
Styrax spp. 2-28
sugarcane 1-6
sugarcane (*Saccharum* spp.) 3-51
summer snowflake 3-56
Swaziland 3-48
Sweden
  Acacia spp. from 3-4

Acer spp. from 3-5
Ajania pacifica from 3-7
Chrysanthemum spp. from 3-13
Leucanthemella spp. from 3-35
Nipponanthemum spp. from 3-39
Salix spp. from 3-52
Ulmus spp. from 3-55
Switzerland
Acacia spp. from 3-4
Acer spp. from 3-5
Ajania pacifica from 3-7
Chrysanthemum spp. from 3-13
Cotoneaster spp. from 3-25
Hibiscus spp. from 3-32
Ilex spp. from 3-34
Leucanthemella spp. from 3-35
Nipponanthemum spp. from 3-39
Pyracantha spp. from 3-49
Salix spp. from 3-52
Ulmus spp. from 3-55
Viburnum spp. from 3-56
sword lily 2-15
Symphoricarpos 3-54
symptoms of diseases 2-21

T

tabasco pepper 3-10
table lamp 2-5
tailflower 2-13, 2-14
Taiwan
Acacia spp. from 3-4
Acer spp. from 3-5
Ajania pacifica from 3-7
Chrysanthemum spp. from 3-13
Cotoneaster spp. from 3-25
Hibiscus spp. from 3-32
host plant material of ALB/CLB from 2-10
Ilex spp. from 3-34
Leucanthemella spp. from 3-35
Nipponanthemum spp. from 3-39
Pyracantha spp. from 3-49
Salix spp. from 3-52, 3-55
Viburnum spp. from 3-56
Tajikistan
Aegilops spp. from 3-6
Tanzania
Aegilops spp. from 3-6
Taxaceae 3-14
Tephritidae 1-7
Texas 3-54, 3-60
Thailand 2-16
Ajania pacifica from 3-7
Chrysanthemum spp. from 3-13
Leucanthemella spp. from 3-35
Nipponanthemum spp. from 3-39
thread waste 1-6
thrips 2-21, 2-23
ti leaves 2-26
Tilletia indica 1-8, 3-54
Toddalioideae 3-51
Toona spp. 2-28
torch ginger 2-26
transit permit A-9, Glossary-4
transmittal number 1-13, 1-14
transvaal daisy 2-15
Treatment Manual 1-10
treatment, definition of Glossary-4
Triteleia 2-17
Triticum spp. (wheat and intergeneric crosses) 3-54
Tritonia spp. 2-16, 2-17
Tsuga 3-15
tulip 2-13, 2-17
Tulipa spp. 2-13, 2-17
Tunisia
Aegilops spp. from 3-6
Ajania pacifica from 3-7
Chrysanthemum spp. from 3-13
Leucanthemella spp. from 3-35
Nipponanthemum spp. from 3-39
tunneling 2-21
Turkey
Aegilops spp. from 3-6
Salix spp. from 3-52
Ulmus spp. from 3-55
Turkmenistan
Aegilops spp. from 3-6

U

U.S. Virgin Islands 1-9
Ukraine
Aegilops spp. from 3-6
Ajania pacifica from 3-7
Chrysanthemum spp. from 3-13
Leucanthemella spp. from 3-35
Nipponanthemum spp. from 3-39
Salix spp. from 3-52
Ulmus spp. from 3-55
Ulmus spp. 2-28
underground crops 1-6
United Kingdom 2-12, 2-13, 3-47
Acacia spp. from 3-4
Acer spp. from 3-5
Ajania pacifica from 3-7
Amaryllis spp. from 2-13
Anthurium spp. from 2-13
Chrysanthemum spp. from 3-13
cut flowers and greenery from 2-12
Cymbidium spp. from 2-13
Freesia spp. from 2-13
Hippeastrum spp. from 2-13
Hyacinthus spp. from 2-13
Leucanthemella spp. from 3-35
Lillium spp. from 2-13
Narcissus from 2-16
Narcissus spp. from 2-13
Nipponanthemum spp. from 3-39
Phalaenopsis spp. from 2-13
Rosa spp. from 2-13
Salix spp. from 3-52
Tulipa spp. from 2-13
Ulmus spp. from 3-55
Zantedeschia spp. from 2-13
United States Fish and Wildlife Service 1-9

Uruguay
Ajania pacifica from 3-7
Chrysanthemum spp. from 3-13
Leucanthemella spp. from 3-35
Nipponanthemum spp. from 3-39
users of the Cut Flowers and Greenery Import Manual 1-4
Ustilago shiraiana 3-10
Utah 3-54, 3-60
Uzbekistan
Aegilops spp. from 3-6

V

Vanda spp. 3-40
vascular plants 2-29
Vatican City
Salix spp. from 3-52
Ulmus spp. from 3-55
vegetables not covered in the Cut Flowers and Greenery Import Manual 1-3
Venezuela
Aegilops spp. from 3-6
Ajania pacifica from 3-7
Chrysanthemum spp. from 3-13
Leucanthemella spp. from 3-35
Nipponanthemum spp. from 3-39
Vernicia spp. 2-28
Veronica 2-17
Veterinary Services permits A-10
vials 2-5
Viburnum spp. 2-28, 3-56
Vietnam
Acacia spp. from 3-4
Acer spp. from 3-5
Cotoneaster spp. from 3-25
Hibiscus spp. from 3-32
host plant material of ALB/CLB from 2-10
Ilex spp. from 3-34
Pyracantha spp. from 3-49
Salix spp. from 3-52, 3-55
viruses 1-8
Vitis spp. 1-7, B-1
Voanioala gerardii 3-9

W

Wales 2-12, 2-13
warehouse 2-4
Washington 3-54, 3-60
watermark disease 3-52
Watsonia 2-17
waxflower 2-14
webbing 3-9
wheat 3-54
wheat and intergeneric crosses 3-54
wheat diseases 1-8
white banner paper 2-5
white laminate 2-4
willow 3-52
windflower 2-14
witchweed 3-54
wreaths 1-7
written permits A-2

X

Xanthomonas citri 1-6

Y

yellow splash 3-7

Z

Zamiaceae 3-26, 3-60
Zantedeschia spp. 2-13, 2-17, 2-24
Zea mays 3-60
Zingiberaceae 2-26
Ziziphus spp. 2-28