89-49

Determination of Power Threshold Response Curves

by

A. Lawrence Kolz

U.S. Department of Agriculture
Denver Wildlife Research Center
Animal and Plant Health Inspection Service
Denver Federal Center, Building 16
Denver, Colorado 80225

and

James B. Reynolds

U.S. Fish and Wildlife Service
Alaska Cooperative Fishery Research Unit[1]
University of Alaska
Fairbanks, Alaska 99775

Abstract

Goldfish (*Carassius auratus*) exposed to controlled electrical fields showed a predicted pattern of electroshock response based on the magnitude of power density induced in the fish. Known levels of electrical power densities ranging from 1 to 6,000 $\mu W/cm^3$ were developed in water holding the fish. The water conductivity was varied from 10 to 10,000 μmhos/cm, and the threshold of power densities required to elicit particular fish responses (i.e., twitch, anodic attraction, or stunned immobility) were recorded. These tests were conducted with three waveforms: direct current, sinusoidal alternating current, and pulsed direct current. We used statistical curve-fitting techniques to estimate the effective electrical conductivity of the goldfish for each waveform and concluded that the magnitude of the power density transferred into the body of a goldfish uniquely determines the electroshock response shown by the fish, and that this in vivo power density threshold is independent of the conductivity of the water. These thresholds of power density conformed to a mathematical relation derived through application of basic principles that describe how electrical power is transferred from water to fish.

In the literature on electrofishing, electrical terms that commonly appear include electrode voltages and currents, water conductivities, and voltage gradients. Rarely is electrical power mentioned as being a significant factor, and the possibility of determining power density for either the water or the fish appears to be completely neglected. However, the magnitude of the power that is transferred from the water into the fish determines the success or failure of any electrofishing operation. Fishery biologists need to understand the factors that control this power transfer. Engineers can describe the transfer of electrical power between dissimilar materials for some conditions, but these concepts need to be extended and verified for

[1]Jointly sponsored by the U.S. Fish and Wildlife Service, Alaska Department of Fish and Game, and University of Alaska, Fairbanks.

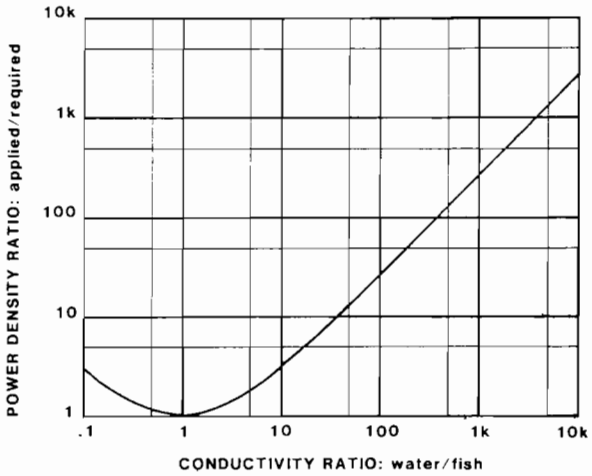

Fig. 1. Normalized curve for predicting the increase in power necessary to maintain a constant transfer of power (k = 1,000; from Kolz 1989).

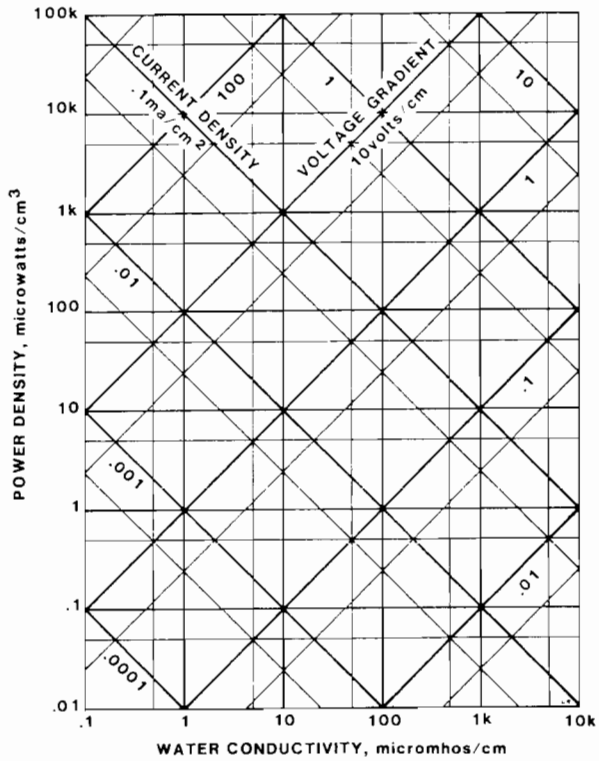

Fig. 2. Relations among power density, conductivity, voltage gradient, and current density (ma = milliamperes, k = 1,000; from Kolz 1989).

electrofishing applications. In a laboratory study, we tested the power transfer theory for electrofishing advanced by Kolz (1989) with a population of goldfish (*Carassius auratus*).

Electrofishing equipment is designed to drive electrical power into water; however, the mere presence of power in water does not ensure that it is efficiently transferred to fish. If an electrical model is assumed in which the fish represents a homogeneous material suspended in water, the amount of power transferred into the fish is determined by the respective conductivities of the water and the fish. All the power available from the water is transferred into the fish only when the conductivity of the fish equals that of the water. If the conductivity values are not equal (commonly referred to as a mismatch), only a fraction of the available power is transferred into the fish. This homogeneous model is an obvious oversimplificaton, for fish are complex structures composed of many types of tissues and fluids having various electrical conductivities. However, it allows one to ignore the complicated internal electrical effects and concentrate on the determination of an "effective" conductivity for a goldfish, as observed from its behavioral response to electroshock.

Fish respond to electrical stimuli with voluntary and involuntary reactions such as body twitching, fright, taxis (forced anodic attraction), narcosis (a state of stunned immobility with slack muscles), and tetany (a state of rigid immobility). We suggest that each distinguishable electroshock response for fish of a given species and size requires a particular threshold of transferred power density, and that these in vivo thresholds are constant in value and independent of water conductivity. Water conductivity does, however, affect the efficiency of the power transfer and thus gives fishery biologists the illusion that water chemistry alters the response of fish. Actually, if the power applied to the water is appropriately compensated to cancel the inefficiency of the power transfer, the fish should react in a predictable manner. The following equation expresses the normalized curve that Kolz (1989) developed to show how the power density applied in the water must be controlled to maintain a constant transfer of power density to a fish under the condition of conductivity mismatch (Fig. 1).

$$D_a/D_m = 1/2 + 1/4[(c_f/c_w) + (c_w/c_f)] \qquad (1)$$

where D_a = applied power density ($\mu W/cm^3$) at a location in the water; D_m = the threshold of in vivo power density to produce a specific electroshock response;

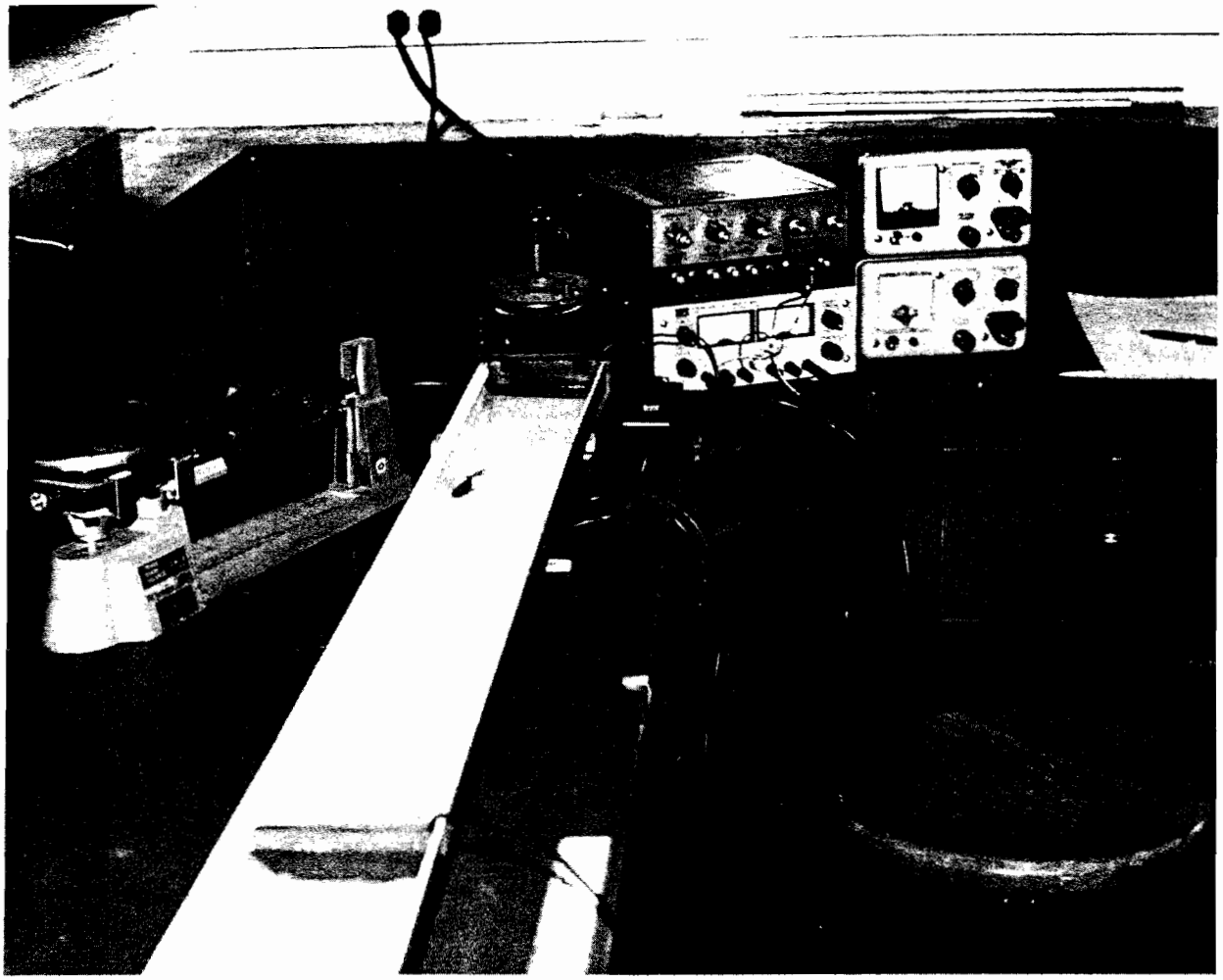

Fig. 3. Electrified fish runway (244 cm long, 20 cm wide, 7 cm high) used to study the reactions of goldfish to electroshock.

c_w = conductivity of the water; and c_f = effective conductivity of the fish. This study was conducted to determine whether goldfish actually respond to electrical power density according to this theory of constant power transfer.

Equation 1 is applied repeatedly in the present work to statistically fit the measured electroshock responses of goldfish plotted on a power density graph (Fig. 2). We hypothesize that the measured thresholds of electroshock response conform to the theoretical equation and that the analyses of the empirical data provide values for c_f and D_m. Furthermore, c_f and D_m are the coordinates of the vertex for each response curve and an estimate of the effective conductivity of the fish and the threshold of in vivo power density.

Methods

Neither the procedures nor the test apparatus that we used conformed with those of conventional electrofishing. Rather, we adapted instrumentation from an electronics laboratory for in-water measurements to determine the actual power density thresholds for goldfish swimming in water solutions concentrated with sodium chloride to electrical conductivities of 10 to 10,000 μmhos/cm. To avoid compromising the results by temperature variations, we conducted all measurements at 20°C. We use the terminology, symbols, and graphs used by Kolz (1989) in describing the theoretical foundation for electrofishing.

Electrified Runway

A plastic rain gutter (244 cm long, 20 cm wide, and 7 cm high) provided the basic electrically insulated structure for the fish runway (Fig. 3). The length and cross section of the runway did not appear to spatially interfere with the reactions of the goldfish to the electrical field; the fish were able to swim and turn easily. (This basic trough design could, of course, be enlarged to accommodate larger fish.) Two copper plates that served as electrodes in the water were cut to the full cross-sectional dimensions of the trough because smaller electrodes would have distorted the voltage gradient. One of these electrodes was permanently attached at one end of the trough and the second could be repositioned as a means of adjusting for voltage gradients exceeding 0.8 V/cm. Because some of the fish responded so actively to the electric field that they jumped out of the runway or collided with the electrodes, we placed nonconductive screens over the runway and in front of the electrodes as physical barriers. This runway design made it unnecessary to restrain the fish or to be concerned with nonlinear field effects.

The capacity to present a uniform voltage gradient to unrestrained fish was a primary concern in this experimental design. Precautions were taken to ensure that the cross-sectional area and water depth were constant along the entire runway. Electrical measurements indicated that the variation in voltage gradient was less than 3%. (Some of the electroshock variability reported by field biologists may result from the effects of nonlinearity of the field.)

Power Sources

The power supply requirements and the design criteria conceived for the electrified fish runway were easily accommodated with off-the-shelf electronic hardware. Three electrical waveforms were tested: direct current (DC), 60 Hz sinusoidal alternating current (AC), and 50 Hz pulsed direct current (PDC).

A voltage source of about 200 V DC was devised by connecting four low-voltage power supplies in series (Fig. 4). This voltage was sufficient to drive gradients of less than 0.8 V/cm along the entire length of the runway. Gradients exceeding 0.8 V/cm were developed by repositioning the one electrode along the runway. At the higher voltage gradients, the fish were thus restricted to a shorter runway. Our highest voltage gradient of 7 V/cm limited the electrified runway to 30 cm. The maximum current was less than 35 mA in water of 10,000 μmhos/cm.

The PDC waveform was generated by placing a reed relay in series with the 200-V supply described for DC operation (Fig. 4). This reed relay operated under control of a pulse generator, and the toggle action of the relay generated the desired pulsed waveforms. Our intent was to use only waveforms showing square pulses, with no distortions such as overshoot, undershoot, slow rise or fall time, or ringing. The pulse repetition frequency was selected at 50 Hz (period = 20 ms), because this rate is about midrange on the commercial pulse generators commonly used in electrofishing. The three experiments with PDC were performed with duty cycles of 50%, 25%, and 10%, which correspond to pulse widths of 10, 5, and 2 ms, respectively.

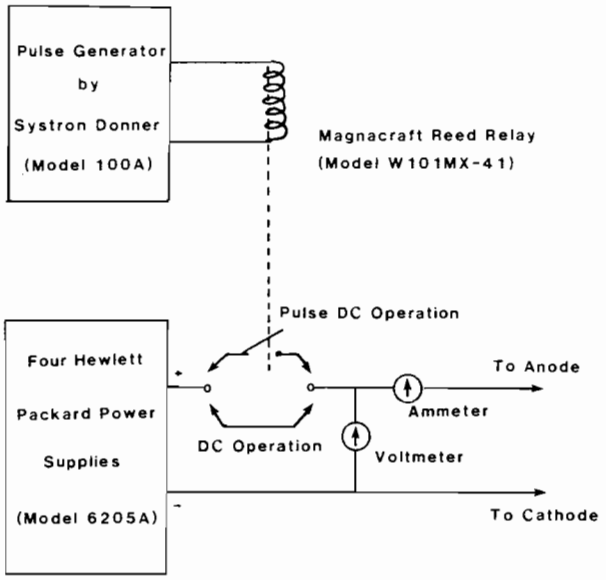

Fig. 4. Power source for direct current (DC) and pulsed direct current (PDC).

The sinusoidal AC waveform was generated with two transformers in series (Fig. 5). The first transformer provided power line isolation (a safety feature) for the second transformer. The second transformer was a variable autotransformer that was connected directly to the electrodes. The frequency of operation was 60 Hz.

Test Procedure

Goldfish were selected as the test species because of their availability and general hardiness. The sample population consisted of 60 fish, 62–90 mm long and weighing 2.5–8.1 g, purchased at a local pet store. The fish were held in a 1-m^2 plastic tank, in water about 20 cm deep; those segregated for acclimation or observation were held in plastic pails. All fish were fed commercial "goldfish flakes" daily. During the experiments, each fish was

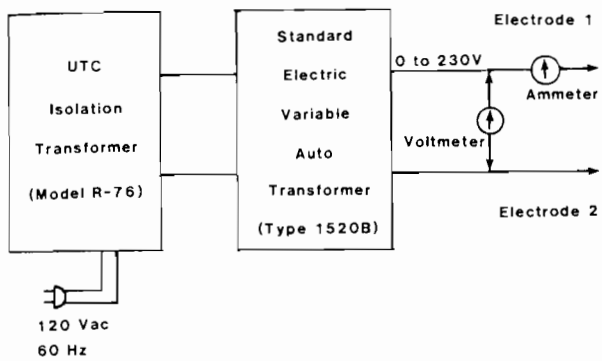

Fig. 5. Power source for alternating current (AC).

electroshocked 2 to 4 times during a 6-week period. The total exposure time to the electrical field was always short, to avoid excessive physical fatigue in the fish. We used the fish more than once because we were not equipped to handle a large number of fish at our improvised study site. However, each fish exposed to an electrical field was allowed at least 7 days of recovery between tests. In general, the procedure involved randomly selecting a group of 8 to 10 fish and acclimating them for 2.5 to 7 days in a water solution mixed to the appropriate test conductivity.

The fish were placed in the runway one at a time, and the voltage gradient was increased in discrete increments from low levels, to which the fish showed no visual response, to high levels, at which the fish were instantly stunned. The goldfish were not subjected to conditions of tetany. This procedure was replicated with six fish for each of four or five values of water conductivity (over the range of 10 to 10,000 μmhos/cm) for each waveform.

A push-button switch wired in series with the runway electrodes allowed manual control of the electrical field. Our usual procedure was to adjust the voltage gradient to a desired level, observe the fish to be in position to freely maneuver away from either electrode, apply the electrical field for about 5 s, and record the observed electroshock response. When DC and PDC waveforms were used, we applied power only while the test fish was facing the cathode. This orientation enabled us to easily determine whether it showed anodic attraction.

Three electroshock responses were recorded: (1) twitch (an immediate shudder at each of three consecutive 1-s switch closures); (2) anodic attraction (immediate turning from the cathode, followed by a forced swim to the anode); and (3) stunned immobility (immediate loss of equilibrium and movement followed by immediate recovery when the switch was opened). As fish reacted progressively to these electroshock responses, the threshold of voltage gradient for each response was recorded. The actual magnitude of power density in the water was calculated from the measures of voltage gradient and water conductivity (i.e., $D = c_w E^2$, where D = power density, c_w = water conductivity, and E = voltage gradient).

After each fish was exposed, it was returned to a holding tank containing normal water (130 μmhos/cm), where its recovery was observed for at least 3 days. We were concerned that the fish would have difficulty in adapting from a conductivity of 130 μmhos/cm to conductivities as high as 10,000 μmhos/cm; however, no precautions were taken, and the fish suffered no apparent adverse effects. They resumed feeding normally after the various tests. They were monitored for 30 days after the conclusion of the tests and remained in apparently good health.

Results

Power density thresholds were measured for goldfish exposed to five waveforms (Figs. 6–10). The theoretical response curves (as defined by equation 1) were fitted to the empirical data at positions statistically determined. All of the illustrated theoretical curves have congruent "U" shapes; only their relative placement on the power density graph differs. The location of each curve was, in fact, completely defined by the vertex coordinates (c_f and D_m) shown with each curve. The electroshock thresholds for the twitch and stun reactions are shown for all five waveforms; the anodic attraction response was present only with DC.

The DC electroshock response was the first we measured, and our inexperience is probably reflected in the relatively high variability of the data. Later refinements in our techniques resulted in greater uniformity in the power densities recorded for AC and PDC. Marine biologists have conducted threshold tests with voltage gradient measures, using PDC waveforms to electroshock saltwater fish (Seidel and Klima 1974; Klima 1974), and have developed field and laboratory measurement procedures that are certainly adaptable to freshwater electrofishing research. These voltage gradient results could not be extrapolated to this study, but we suggest that the theory for constant power transfer could be applied to the electroshock response of saltwater fish. However, the effective conductivity for marine fish may be significantly different from that determined for freshwater fish.

There are several ways of calculating power with time-varying waveforms (Thompson 1955), but we believe that

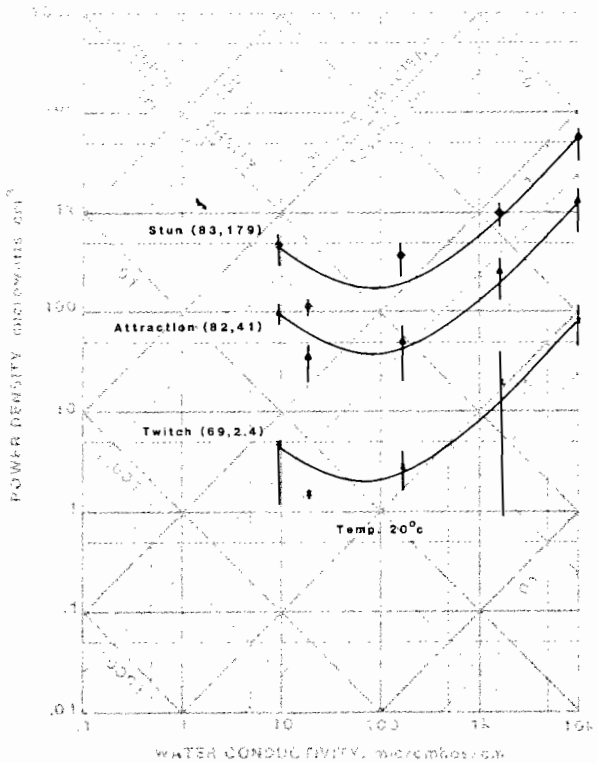

Fig. 6. Electroshock response of goldfish to a DC waveform (k = 1,000).

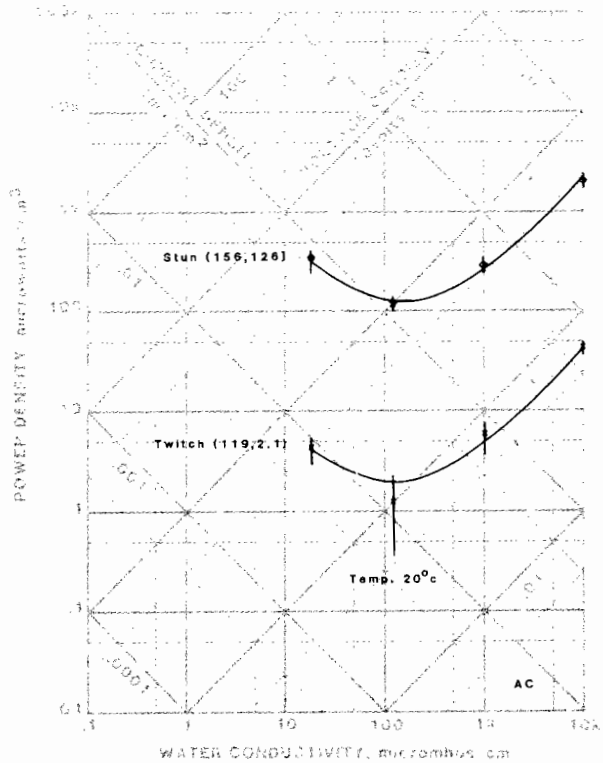

Fig. 7. Electroshock response of goldfish to an AC waveform (k = 1,000).

many electrofishing personnel have not been introduced to these concepts. Seidel and Klima (1974) suggested that there may be a constant minimum of total power required to control fish, but their experimental data were insufficient to substantiate this hypothesis. In fact, the instrumentation designed for electrofishing equipment should reflect methods for determining power, but this requirement is commonly ignored by users and manufacturers alike. The terminology that we prefer is the maximum or peak power density. For example, the peak power density with our PDC waveform was the constant level of power sustained while the pulse was present. The peak values for an AC waveform exist for those instants when the sine wave passes through its maximum excursions. These time-varying waveforms are in contrast to DC, which drives a constant power density into the water.

It was not known before these tests whether the peak or effective power density calculations (i.e., average for PDC or root-mean-square for AC) would provide the better correlation with the electroshock observations. The correct measure for power is still uncertain because the data were limited, but as judged by the three tests with PDC waveforms, the peak calculations appeared to correlate better than the numbers for effective power. Thus, goldfish were considered to be responding to the peak value of power density, and this conclusion was extended to the AC waveform. However, this interpretation was based on the PDC tests, and additional testing should be performed with pulses of shorter duration and other waveforms. Saltwater fish have been shown to respond differently to waveforms having different pulse widths and pulse rates (Seidel and Klima 1974), and precautions must be taken in making generalized statements based on any particular waveform. Our electroshock data are summarized in Table 1.

Discussion

The results of the power density measurements extended well beyond the original intent of the experiment. Some conclusions were provocative and suggested that practices currently accepted for electrofishing are questionable.

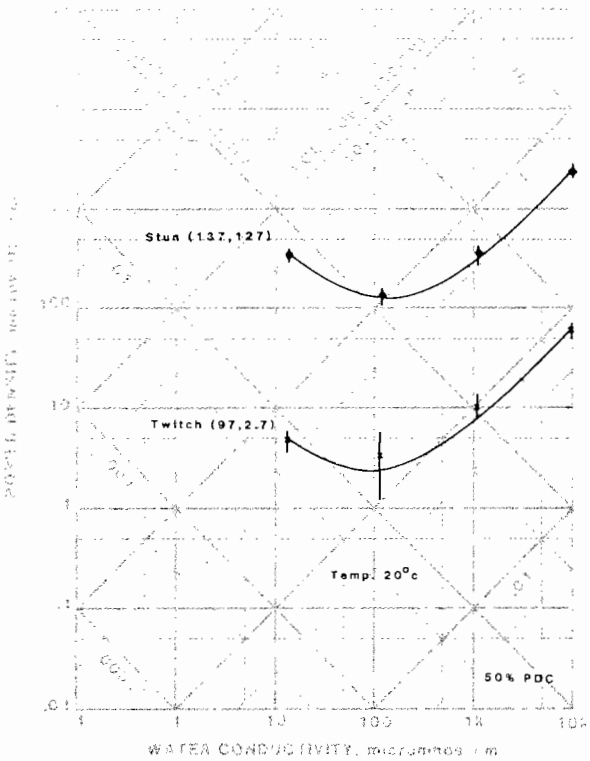

Fig. 8. Electroshock response of goldfish to a 50% duty cycle pulsed DC (PDC) waveform (k = 1,000).

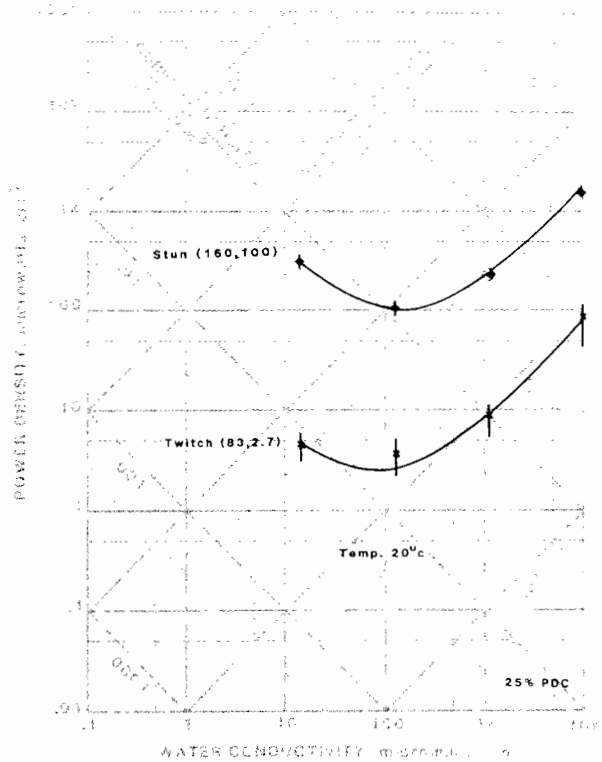

Fig. 9. Electroshock response of goldfish to a 25% duty cycle pulsed DC (PDC) waveform (k = 1,000).

Power Density Comparisons

Goldfish responded with a twitch to all five waveforms in a narrow range of peak power densities of 2.1–2.7 $\mu W/cm^3$. This similarity might be anticipated, as judged from the tenets predicated for constant power transfer and the concept that electroshock is a neural interference phenomenon (Kolz 1989). The resolution in the data was inadequate to enable us to determine if fish detected one waveform more easily than another.

The threshold of anodic attraction was measured at a power density of 41 $\mu W/cm^3$ with DC. Anodic attraction was not observed with the particular PDC waveforms used for these tests, and anodic attraction is of course not possible with AC. This lack of anodic attraction with PDC implies that fish cannot be controlled by these electric fields at this low level of power density.

The goldfish were stunned with AC and PDC within a peak power density range of 100–127 $\mu W/cm^3$. The experimental accuracy was insufficient to discriminate differences in power density thresholds between AC and PDC. Therefore a threshold of 114 $\pm$ 14 $\mu W/cm^3$ (mean $\pm$ SD) was calculated for the four waveforms. In conventional electrofishing practices, differences between these AC and PDC fields operating at 114 $\mu W/cm^3$ would not be distinguishable; the fish would simply be stunned when netted in the water. However, fish subjected to AC recovered more slowly than those exposed to DC or PDC, and the one fish that died during our tests had been exposed to AC. The polarity reversal inherent in AC waveforms is a potentially hazardous factor not discussed here.

The DC threshold required to stun fish was 179 $\mu W/cm^3$, or 57% higher than that for AC or PDC. This increase in power density, however, is not to be misconstrued as a needless expenditure of energy, because DC fields also control fish by attraction. The threshold for DC attraction was 41 $\mu W/cm^3$, or 36% of the peak power required with AC or PDC. It becomes obvious from these power density measurements that electrofishing personnel must consider many factors in selecting and designing equipment.

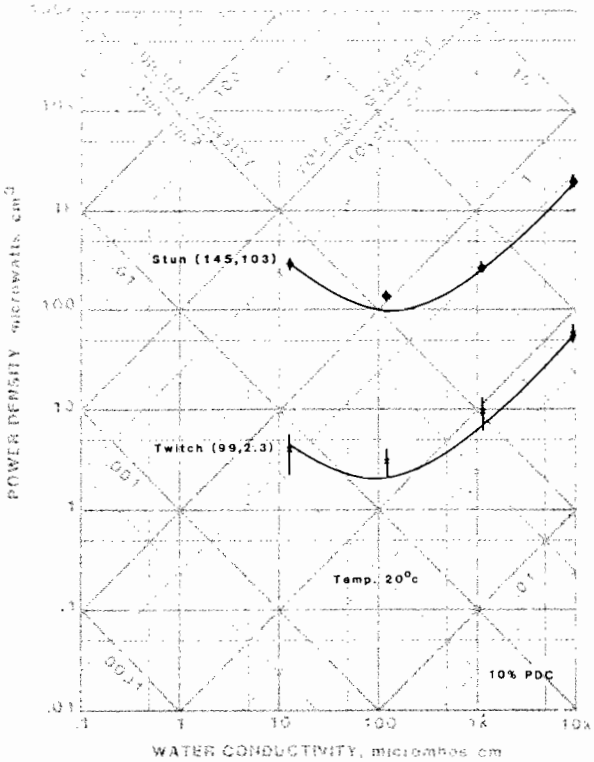

Fig. 10. Electroshock response of goldfish to a 10% duty cycle pulsed DC (PDC) waveform (k = 1,000).

Correlation of Empirical Data Against Theory

By applying the SAS NONLIN procedure (SAS Institute 1985), we used nonlinear least squares regression to fit the power density relation in equation 1. These analyses cannot determine coefficients of correlation because of their parametric nonlinearity. However, the curves in Figs. 6–10 are in themselves convincing evidence that correlation is high, considering that the data span four orders of magnitude in power density and three decades in conductivity. The data presented for stunned immobility are particularly significant; the standard deviations are small and the statistical fit closes on the mean values. We judge the quality of these data adequate to establish the validity of the constant power concept, but we also recognize the need to extend observations to other species of fish.

Effective Conductivities for Goldfish

The effective conductivity values for goldfish ranged from 69 to 160 μmhos/cm (Table 1). These numbers are lower than values published by Monan and Engstrom (1963) and Sternin et al. (1972); however, these researchers did not apply power density concepts as a measurement technique on live fish, and effective conductivity values are here defined in relation to observed electroshock responses and not to electrical measurements.

The test data consistently showed the magnitude of the effective fish conductivity to be less for the twitch response than for the corresponding stunning response. This means that the vertices of the response curves for a given waveform were not in vertical alignment, and that some of the variations approached 50%. However, given the state of the art in electrofishing techniques, we consider it reasonable to average the conductivity values for a given waveform. These conductivity variations reflect the complexities of trying to develop an electrical model for a fish, and obviously the model is more sophisticated than one concerning a homogeneous material suspended in water. The immediate concern of the fishery biologist, however, is to measure the effective conductivity values for various species and sizes of fish. For these measures, the techniques described here are fully applicable.

One of the enlightening observations from this experiment was the obvious dependence of effective fish conductivity on frequency. Average conductivities (μmhos/cm; Table 1) were 78 for DC, 120 for PDC (at 50 Hz), and 138 for AC (at 60 Hz). This frequency-related increase in conductivity suggests that effective fish conductivity comprises two components: resistance and capacitive reactance. An electrical model for a living cell incorporating capacitive reactance was described by Sternin et al. (1972), but no electrical measures have been reported for live animals. Our power density measurement techniques for goldfish appear to be sufficiently sensitive to merit consideration for studies involving intercellular capacitance.

Anomalies with Common Procedures

The results for these tests were unsettling because of the lack of anodic attraction with PDC waveforms. This observation was so unexpected that we stopped the experiment to recalibrate the equipment and repeat the DC measurements. We concluded that there is no anodic attraction in goldfish at a frequency of 50 Hz with pulse duty cycles between 10% and 50%. If this result proves true with other species, many existing electrofishing practices must be reevaluated. However, Klima (1972) reported that the electrotaxis effects on 12 species of saltwater fish was highly dependent on both the fish species and the characteristics of the pulsed waveform. A combination of factors may have contributed to the ineffectiveness of the three PDC waveforms we tested.

Table 1. *Power density thresholds under matched conductivity conditions.*[a]

Electroshock response and current waveform	Power density at match (D_m) ($\mu W/cm^3$) Peak	Effective	Effective fish conductivity (c_f)[b] (μmhos/cm)
Twitch			
DC	2.4	2.4	69
AC	2.1	1.1	119
PDC (50%)	2.7	1.4	97
PDC (25%)	2.7	0.7	83
PDC (10%)	2.3	0.2	99
Attraction			
DC	41	41	82
Stunning			
DC	179	179	83
AC	126	63	156
PDC (50%)	127	64	137
PDC (25%)	100	25	160
PDC (10%)	103	10	145

[a] By matched conductivity, we mean that the conductivity of the water and the effective conductivity of the fish are equal. Under the concept of constant power transfer (Kolz 1989), the matched power density is interpreted as the threshold of in vivo power density required to elicit a specific electroshock response from a fish in water of any conductivity.

[b] By definition, the effective fish conductivity is equal to the water conductivity at this minimum of power density (Kolz 1989). The vertex of a power density response curve identifies the minimum power density necessary to elicit a specific electroshock response.

One rule of thumb often used by fishery biologists is that of adjusting the in-water voltage gradients to a range between 0.1 and 1.0 V/cm (Edwards and Higgins 1973). The significance of this voltage gradient range is clear when the asymptotic gradient lines at 0.1 and 1.0 V/cm are noted relative to the twitch and stun responses. However, this guide is known to be ineffective in low-conductivity water, and this departure is easily explained by the nonlinearity of the response curves. The data show that higher voltage gradients are required when one is electrofishing in water of low conductivity. The "U" shape of the electroshock response curves explains many of the confounding problems commonly experienced by operators of electrofishing equipment.

Power Supply Design Considerations

Equation 1 contains a subtle characteristic of interest to design engineers. If one envisions two points at the same power level on opposite sides of the U-shaped constant power curve, the point on the right can be construed to represent a circuit that would be optimally driven by a constant-voltage source with low internal resistance. This is comparable to a Thevenin's constant-voltage supply with a series resistance (Thompson 1955). The point on the left can be considered to be a dual equivalent circuit, best represented by a constant-current source—that is, a Norton's constant-current source with a parallel resistance (Thompson 1955). Therefore, during electrofishing in high conductivity water (at water-to-fish conductivity ratios greater than 10), electrofishing equipment should show the characteristics of a constant-voltage source. For conditions of low conductivity, the equipment should perform as a constant-current generator. Most electrofishing equipment is not designed to adequately perform in waters ranging from low to high conductivity, because the equipment is limited by either voltage or current.

Hypothesis and Corollaries

Inasmuch as power density calculations supported the concept of constant power transfer by demonstrating that goldfish showed the predicted pattern of electroshock response, we offer the following hypothesis and corollaries for use in additional testing with other species of fish and for refinements in the understanding of power transfer.

A hypothesis on electrofishing: Electroshock effects as applied to electrofishing are directly related to the magnitude of in vivo power density.

Corollary 1: Fish respond to the electrical power density in water in a manner consistent with power transfer theory, wherein the effective conductivity values of the water and the fish define the efficiency of the power transfer.

Corollary 2: The threshold of in vivo power density required to elicit a particular electroshock response from a fish is independent of water conductivity but dependent on the applied voltage waveform.

References

Edwards, J. L., and J. D. Higgins. 1973. The effects of electric currents on fish. Engineering Experiment Station, Georgia Institute of Technology, Atlanta Tech. Rep. B-397, B-400, and E-200-301. 75 pp.

Klima, E. F. 1972. Voltage and pulse rates for inducing electrotaxis in twelve coastal pelagic and bottom fishes. J. Fish. Res. Board Can. 29:1605–1614.

Klima, E. F. 1974. Electrical threshold response of some Gulf of Mexico fishes. U.S. Natl. Mar. Fish. Serv. Fish. Bull. 72:851–853.

Kolz, A. L. 1989. A power transfer theory for electrofishing. Pages 1–11 *in* Electrofishing, a power related phenomenon. U.S. Fish Wildl. Serv., Fish Wildl. Tech. Rep. 22. 24 pp.

Monan, G. E., and D. E. Engstrom. 1963. Development of a mathematical relationship between electric-field parameters and the electrical characteristics of fish. U.S. Fish Wildl. Serv., Fish. Bull. 63:123–136.

SAS Institute. 1985. SAS user's guide: statistics. Version 5 Edition. SAS Institute Inc., Cary, N.C.

Seidel, W. R., and E. F. Klima. 1974. In situ experiments with coastal pelagic fishes to establish design criteria for electrical fish harvesting systems. U.S. Natl. Mar. Fish. Serv. Fish. Bull. 72:657–669.

Sternin, V. G., I. V. Nikonorov, and Y. K. Bumeister. 1972. Electrical fishing, theory and practice. Translated from Russian by Israel Program for Scientific Translations, Jerusalem, 1976. TT 75-50005, U.S. Department of Commerce, Springfield, Va. 361 pp.

Thompson, H. A. 1955. Alternating-current and transient circuit analysis. McGraw-Hill, New York.

Kolz, A. L., and J. B. Reynolds. 1989. **Determination of Power Threshold Response Curves.** Pages 15–24 *in* Electrofishing, a Power Related Phenomenon. U.S. Fish Wildl. Serv., *Fish Wildl. Tech. Rep.* 22. 24 pp.

Thresholds of electroshock response are measured for goldfish (*Carassius auratus*), and power density data are correlated to a mathematical relation derived for constant power transfer under conditions of electrical conductivity mismatch. Electroshock thresholds are graphically presented for three applied waveforms: direct current, sinusoidal alternating current, and pulsed direct current. The magnitude of the power density transferred into the body of a goldfish is shown to uniquely determine its electroshock response.

Key words: Fish, electricity, threshold, electrical shock, power, power density, voltage, conductivity.

Kolz, A. L., and J. B. Reynolds. 1989. **Determination of Power Threshold Response Curves.** Pages 15–24 *in* Electrofishing, a Power Related Phenomenon. U.S. Fish Wildl. Serv., *Fish Wildl. Tech. Rep.* 22. 24 pp.

Thresholds of electroshock response are measured for goldfish (*Carassius auratus*), and power density data are correlated to a mathematical relation derived for constant power transfer under conditions of electrical conductivity mismatch. Electroshock thresholds are graphically presented for three applied waveforms: direct current, sinusoidal alternating current, and pulsed direct current. The magnitude of the power density transferred into the body of a goldfish is shown to uniquely determine its electroshock response.

Key words: Fish, electricity, threshold, electrical shock, power, power density, voltage, conductivity.

Kolz, A. L., and J. B. Reynolds. 1989. **Determination of Power Threshold Response Curves.** Pages 15–24 *in* Electrofishing, a Power Related Phenomenon. U.S. Fish Wildl. Serv., *Fish Wildl. Tech. Rep.* 22. 24 pp.

Thresholds of electroshock response are measured for goldfish (*Carassius auratus*), and power density data are correlated to a mathematical relation derived for constant power transfer under conditions of electrical conductivity mismatch. Electroshock thresholds are graphically presented for three applied waveforms: direct current, sinusoidal alternating current, and pulsed direct current. The magnitude of the power density transferred into the body of a goldfish is shown to uniquely determine its electroshock response.

Key words: Fish, electricity, threshold, electrical shock, power, power density, voltage, conductivity.

Kolz, A. L., and J. B. Reynolds. 1989. **Determination of Power Threshold Response Curves.** Pages 15–24 *in* Electrofishing, a Power Related Phenomenon. U.S. Fish Wildl. Serv., *Fish Wildl. Tech. Rep.* 22. 24 pp.

Thresholds of electroshock response are measured for goldfish (*Carassius auratus*), and power density data are correlated to a mathematical relation derived for constant power transfer under conditions of electrical conductivity mismatch. Electroshock thresholds are graphically presented for three applied waveforms: direct current, sinusoidal alternating current, and pulsed direct current. The magnitude of the power density transferred into the body of a goldfish is shown to uniquely determine its electroshock response.

Key words: Fish, electricity, threshold, electrical shock, power, power density, voltage, conductivity.

☆ U.S. Government Printing Office: 1989—678 208/00018